MANUAL PARK RELEASE

Warning:

Always secure your vehicle by fully applying the parking brake before activating the Manual Park Release. In addition, you should be seated in the driver's seat with your foot firmly on the brake pedal when activating the Manual Park Release. Activating the Manual Park Release will allow your vehicle to roll away if it is not secured by the parking brake, or by proper connection to a tow vehicle. Activating the Manual Park Release on an unsecured vehicle could lead to serious injury or death for those in or around the vehicle.

In order to move the vehicle in cases where the transmission will not shift out of PARK (P) (such as a depleted battery), a Manual Park Release is available.

Follow these steps to activate the Manual Park Release:

1. Apply firm pressure to the brake pedal while seated in the driver's seat.
2. Apply the parking brake if possible.
3. Using a small screwdriver or similar tool, open the Manual Park Release cover, which is located to the lower left of the steering column.

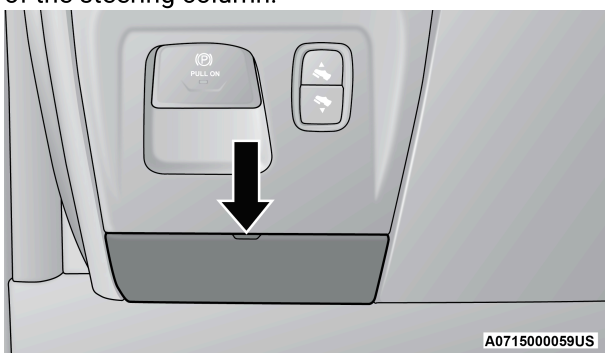

Manual Park Release Access Cover

4. Behind the Manual Park Release access cover is the orange tether strap. Pull the tether strap out as far as it will go, then release it. The tether and lever will remain outside of the trim panel and the transmission should now be in NEUTRAL, allowing the vehicle to be moved.

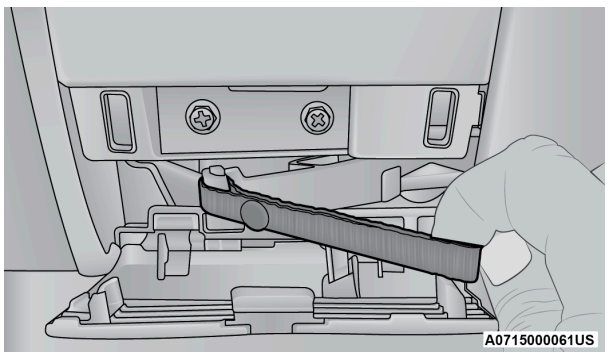

Manual Park Release Tether

To Reset The Manual Park Release:

1. Apply firm pressure to the brake pedal while seated in the driver's seat.
2. Pull the tether strap out again, then release it.
3. Allow the tether to retract with the lever back to its original position.

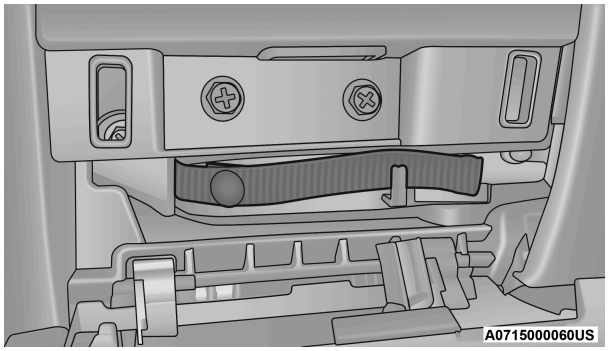

Manual Park Release Tether

4. Verify the transmission is in PARK.
5. Confirm that the tether has retracted fully and reinstall the access cover. If the access cover cannot be reinstalled, repeat steps 1 through 4.

Note:

When the lever is locked in the released position the access cover cannot be reinstalled.

Parent topic: IN CASE OF EMERGENCY