FCA
FIAT CHRYSLER AUTOMOBILES

PERFORMANCE INSTITUTE

Engine Management: Operation and Diagnosis Phase 1

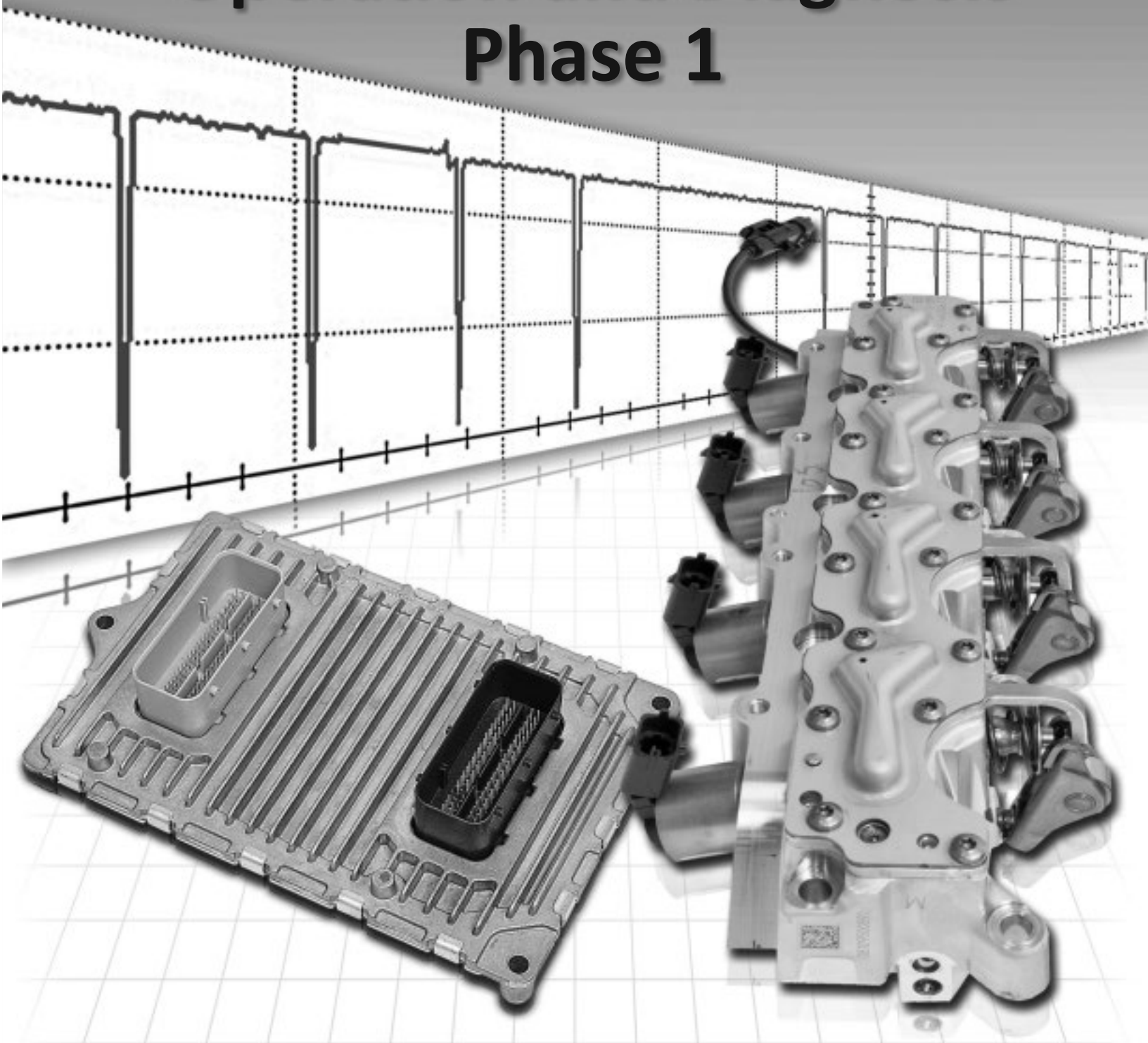

Student Workbook

SAFETY NOTICE

This publication's purpose is to provide technical training information to individuals in the automotive trade. All test and repair procedures must be performed in accordance with manufacturer's service and diagnostic manuals. All ***warnings***, ***cautions***, and ***notes*** must be observed for safety reasons. The following is a list of general guidelines:

- Proper service and repair is critical to the safe, reliable operation of all motor vehicles.
- The information in this publication has been developed for service personnel, and can help when diagnosing and performing vehicle repairs.
- Some service procedures require the use of special tools. These special tools must be used as recommended throughout this Technical Training Publication, the diagnostic manual, and the service manual.
- Special attention should be exercised when working with spring- or tension-loaded fasteners and devices such as E-Clips, Cir-clips, snap rings, etc. Careless removal may cause personal injury.
- Always wear safety goggles when working on vehicles or vehicle components.
- Improper service methods may damage the vehicle or render it unsafe.
- Observe all ***warnings*** to avoid the risk of personal injury.
- Observe all ***cautions*** to avoid damage to equipment and vehicles.
- ***Notes*** are intended to add clarity and should help make your job easier.

Cautions and ***warnings*** cover only the situations and procedures FCA US LLC has encountered and recommended. Neither FCA US LLC nor its subsidiaries or affiliates cannot know, evaluate, and advise the service trade of all conceivable ways in which service may be performed, or of the possible hazards for each. Consequently, FCA US LLC and its subsidiaries and affiliates have not undertaken any such broad service review. Accordingly, anyone who used a service procedure or tool that is not recommended in this publication, must be certain that neither personal safety, nor vehicle safety, is jeopardized by the service methods they select.

No part of this publication may be reproduced, stored in a retrieval system or transmitted, in any form or by any means, electronic, mechanical, photocopying, recording, or otherwise, without the prior written permission of FCA US LLC.

FCA US LLC reserves the right to make changes from time to time, without notice or obligation, in prices, specifications, colors and materials, and to change or discontinue models. See your dealer for the latest information.

Copyright © 2016 FCA US LLC

MASTERTECH

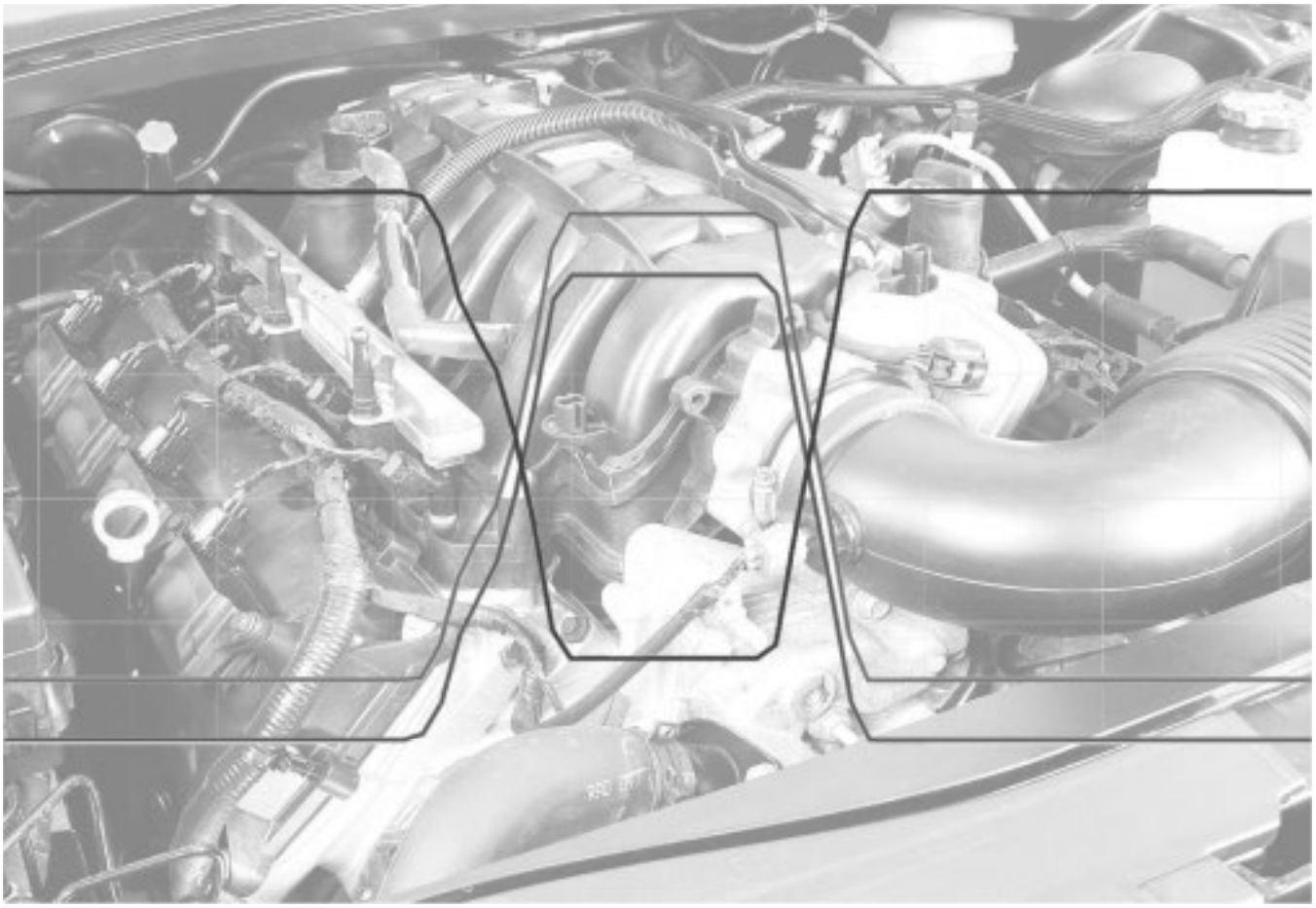

TABLE OF CONTENTS

INTRODUCTION **1**
COURSE OBJECTIVES **1**
SIX-STEP TROUBLESHOOTING PROCEDURE **2**
Step 1. Verify the Concern 2
Step 2. Determine Related Symptoms 2
Step 3. Analyze the Symptoms 3
Step 4. Isolate the Cause 4
Step 5. Repair the Concern 4
Step 6. Verify Vehicle Operation 4
DEMONSTRATION 1 CIRCUIT TESTING 101 . . . . . **7**
LESSON 1 POWERTRAIN CONTROL MODULE (PCM) **13**
PCM OPERATION 13
Speed Density Equation 13
PCM Evolution 14
Next Generation Controller (NGC) 16
Global Powertrain Electronic Controller, 1st Generation (GPEC1) 17
Global Powertrain Electronic Controller, 2nd Generation (GPEC2) 18
Global Powertrain Electronic Controller, 3rd Generation (GPEC3) 19
8GMx Series Controllers 20
SPECIAL TOOLS 21
NGC Pinout Box #8815 21
GPEC 2/3 GPEC Diagnostic Adapter #10436 22
Special Tool #8197A Terminal Pin Removal Tool Kit (FCA US LLC) 23
Special Tool #10300 Terminal Pin Removal Tool Kit (FIAT) 24
VERIFYING PCM POWER, GROUND, AND COMMUNICATION CIRCUITS 25
Power and Ground Circuits 25
Power and Ground Diagnosis 26
ACTIVITY 1 DIAGNOSING PCM CIRCUITS USING A DIGITAL MULTIMETER **29**
TASK ONE: PCM POWER AND GROUND DIAGNOSIS - GPEC2 VEHICLE 29
TASK TWO: PCM POWER AND GROUND DIAGNOSIS 8GMX VEHICLE 32
LESSON 1 POWERTRAIN CONTROL MODULE (PCM) (CONTINUED) **37**
OBDII OVERVIEW 37
J1962 Data Link Connector (DLC) 37
DIAGNOSTIC TROUBLE CODES (DTCS) 38
Input Rationality 40
Output Functionality 41

DTC and MIL Strategies 41
Good Trips 42
Warm-up Cycles 42
Clearing DTCs with Scan Tools 43
Flashing MIL. 43
Freeze Frames 44
Freeze Frame Rules 46
Clearing Freeze Frame Data (GPEC1) 46
DTC Priorities 47
Multiple DTC Diagnosis 47
PCM SERVICE 48
PCM REPLACEMENT 48
FLASH PROGRAMMING 50
DEMONSTRATION 2 FREEZE FRAME DATA. 53
TASK ONE: FREEZE FRAME ANALYSIS 53
LESSON 2 PCM INPUTS 55
PCM DIGITAL INPUTS 55
Typical CKP/CMP Sensor Circuit 56
Crankshaft Position (CKP) and Camshaft Position (CMP) Sensors 56
Crankshaft Position (CKP) and Camshaft Position (CMP) Triggers. 57
CKP Trigger Wheel. 58
Bi-directional Crank Sensor and Trigger Wheels 59
CMP Trigger Wheel 60
CMP Magnetic Trigger Wheels 61
World Engine CMP Trigger Wheel 62
Crankshaft Position (CKP) and Camshaft Position (CMP) Sensor Diagnostics 62
CKP and CMP Synchronization 63
Cam/Crank Variation Relearn or Target Linear Correlation 64
ACTIVITY 2 DIAGNOSE SENSOR INPUTS 67
TASK ONE: CRANKSHAFT/CAMSHAFT POSITION SENSOR DIAGNOSIS. 67
LESSON 2 PCM INPUTS (CONTINUED) 71
MANIFOLD ABSOLUTE PRESSURE (MAP) SENSOR. 71
MAP Sensor 71
MAP Sensor Circuit 72
MAP Sensors on Turbocharged Vehicles 73
Throttle Position Sensor 74
Electronic Throttle Control Circuit 75
TPS Voltage vs. Position 76

TPS Signals 77
ETC TPS Diagnostics 77
Accelerator Pedal Position (APP) Sensors 79
APP Sensor Circuits 80
APP Signal vs. Pedal Travel 81
APP Signal Self Test 82
APP Sensor Diagnostics 83
EGR Position Sensor 84
EGR Position Sensor Diagnostics 84
Fuel Tank Pressure Sensor 85
Fuel Rail Pressure Sensor 87
Fuel Rail Pressure Sensor Diagnostics 88
ACTIVITY 2 DIAGNOSE SENSOR INPUTS (CONTINUED) 91
TASK TWO: MAP SENSOR DIAGNOSIS 91
LESSON 2 PCM INPUTS (CONTINUED) 95
TWO-WIRE ANALOG SENSOR INPUTS 95
NTC Thermistors 95
NTC Thermistor Circuit 96
NTC Thermistor Temperature/Resistance Curve 97
TEMPERATURE SENSOR RATIONALITY 99
Engine Coolant Temperature (ECT) Sensor 99
Engine Coolant Temperature (ECT) Sensor Diagnostics 100
Intake Air Temperature (IAT) Sensor 100
Intake Air Temperature (IAT) Sensor Diagnostics 100
Transmission Fluid Temperature Sensor 100
Engine Oil Temperature Sensor 101
OTHER PCM INPUTS 101
Sensed B+ Battery Voltage 101
Knock Sensors 102
ACTIVITY 2 DIAGNOSE SENSOR INPUTS (CONTINUED) 105
TASK THREE: INTAKE AIR OR COOLANT TEMPERATURE SENSOR CIRCUIT DIAGNOSIS . . 105
LESSON 2 PCM INPUTS (CONTINUED) 109
OXYGEN SENSORS 109
Oxygen Sensor Signal Circuit 110
Oxygen Sensor Locations and Naming 111
Open-loop Operation 112
Closed-loop Operation 112
Oxygen Sensor Signal 113

Oxygen Sensor Diagnostics. 113
Downstream Oxygen Sensor 115
Shift to Reduce High Oxygen Content. 116
Shift to Reduce Low Oxygen Content 117
Oxygen Sensor Heaters 118
Oxygen Sensor Heater High-side Driver Circuits 119
Oxygen Heater Diagnostics. 120
Wide Band Oxygen Sensor 121
Zirconium Type Oxygen Sensors 122
Cross Section of Zirconium Oxygen Sensor 123
Lean Air/Fuel Ratio Exhaust Gas 124
Rich Air/Fuel Ratio Exhaust Gas 125
Wide Band Sensor Schematic 126
Oxygen Sensor Voltage and Amperage Measurements 127
Wideband O2 Sensor Diagnostics 128
ACTIVITY 2 DIAGNOSE SENSOR INPUTS (CONTINUED). 131
TASK FOUR: OXYGEN SENSOR CIRCUIT DIAGNOSIS (NARROW BAND). 131
TASK FIVE: LINEAR AIR/FUEL SENSOR DIAGNOSIS (WIDE BAND) 132
LESSON 3 PCM OUTPUTS. 135
PCM OUTPUTS. 135
Low-side Driver Operation. 135
Low-side-controlled Devices 135
Low-side Output Control. 136
Low Side Driver Diagnostics 137
High-side-controlled Devices. 139
High-side Driver Diagnostics. 141
Power Relays 143
GPEC1 Main Relay 144
Ignition Coil Control 146
Ignition Coil Diagnosis 147
Fuel Injector Control. 149
Fuel Injector Control Circuit. 150
Fuel Injector Diagnostics. 150
Fuel Pump Control Module. 153
Fuel Pump Control Module Diagnostics. 157
ELECTRONIC THROTTLE CONTROL (ETC) SYSTEM 158
Motor Polarity Throttle Opening 159
Motor Polarity Throttle Closing 160

Starting a Vehicle with ETC 160
ETC Warning Light. 162
Fail-safe Mode 162
Limp-in mode 163
ACTIVITY 3 DIAGNOSE PCM OUTPUTS. 165
TASK ONE: ELECTRONIC THROTTLE CONTROL 165
LESSON 3 PCM OUTPUTS (CONTINUED) 169
MULTIPLE DISPLACEMENT SYSTEM (MDS) - 5.7 LITER HEMI. 169
MDS Hydraulic Lifter 170
MDS Operation 170
MDS Solenoid. 171
VARIABLE CAMSHAFT TIMING (VCT) SYSTEM. 172
VCT System Operation 172
VCT Camshaft Components 173
VCT Oil Supply. 174
Oil Control Valve Operation 175
Variable Valve Timing Systems 176
Valve Lift Profiles 177
Valve Overlap Strategy 178
Camshaft Phaser Actuator Solenoids 179
Camshaft Phaser Oil Flow. 180
Cam Phaser with Cover Removed 181
Camshaft Actuator Operation 182
Exhaust Camshaft Phaser Spring 183
Cam Phaser to DTC Relationship 184
MultiAir® Actuator Assembly. 185
MULTIAIR SYSTEM DIAGNOSIS. 186
Camshaft 186
Roller Follower 186
MultiAir Oil Screen 186
MultiAir Operation Phases 187
Full Lift Phase 187
Early Intake Valve Closing. 188
Late Intake Valve Opening Phase 189
Multi-lift Phase 190
Closed Phase 190
ACTIVITY 3 DIAGNOSE PCM OUTPUTS (CONTINUED) 193
TASK TWO: VARIABLE CAMSHAFT TIMING SYSTEM DIAGNOSIS. 193

TASK THREE: VARIABLE VALVE TIMING SYSTEM DIAGNOSIS. 195
TASK FOUR: MULTIAIR SYSTEM OPERATION AND DIAGNOSIS. 197
LESSON 3 PCM OUTPUTS (CONTINUED) 201
INDUCTION SYSTEM 201
Linear EGR Valve 201
Manifold Tuning Valve (MTV) 202
Short Runner Valve (SRV) 203
World Engine Flow Control Valve 205
Flow Control Valve Positions 206
Vacuum Pump 207
Cooling Fan Multi-speed System. 209
TURBOCHARGER SYSTEM. 210
Turbocharger. 210
Wastegate Control 211
Boost Pressure Sensor 212
Surge Valve 213
After Run Pump 214
ACTIVITY 3 DIAGNOSE PCM OUTPUTS (CONTINUED) 217
TASK FIVE: TURBOCHARGER ACTUATOR AND WASTEGATE SYSTEM 217
TASK SIX: EGR SYSTEM DIAGNOSIS (OPTIONAL) 219
LESSON 4 SPEED DENSITY AND ADAPTIVE STRATEGIES 221
SPEED DENSITY. 221
Airflow 221
Fuel Modifiers 223
Feedback Input 223
Stoichiometric Air/Fuel Ratio 224
Adaptives. 225
Open-loop Operation 226
Closed-loop Operation 226
Purge Vapor Ratio 226
Fuel Injector Pulse-width 226
Short-term Adaptive Oxygen Sensor Voltage. 227
Fuel Monitor. 228
SCAN TOOL VALUES COMPARISON FOR ADAPTIVE DIAGNOSIS 229
Purge Vapor Ratio 229
OFF (Mode 0). 229
LEARN (Mode 1). 229
NORMAL (Mode 2) 230

ACTIVITY 4 ADAPTIVE FUEL STRATEGIES **233**
TASK ONE: ADAPTIVE FUEL STRATEGIES 233
APPENDIX **237**
Acronyms 237
Vacuum Leaks 238
ETC Diagnostics 238
Manifold Absolute Pressure (MAP) Sensor Diagnostics 239
Hall-effect Throttle Position Sensor 241
Throttle Position Sensor (TPS) Diagnostics 241
Fuel Level Sensor 241
Dual Fuel Level Sensors 242
Fuel Level Sensor Diagnostics 242
FCA US LLC ENGINE SCOPE PATTERNS 244
Four-cylinder Timing Diagram 244
Six-cylinder Timing Diagram 245
Six-cylinder 3.7 liter NGC Timing Diagram 246
Eight-cylinder Timing Diagram - 4.7 liter Coil-on-plug Ignition System 247
Eight-cylinder Timing Diagram - 5.7 liter Hemi 248
Eight-cylinder 5.7 liter Hemi VCT Timing Diagram 249
Six-cylinder 3.6 liter with VVT Timing Diagram 250
GLOSSARY **253**

Notes:

INTRODUCTION

This two-day, instructor-led course is intended to provide the technician with the knowledge and skills necessary to diagnose and service engine management systems used on FCA US LLC vehicles. This course is the second of three parts for engine management systems diagnostics training. This course focuses on the knowledge and skills required to diagnose and repair diagnostic trouble code (DTC) based concerns with an overview of the powertrain control module (PCM) and vehicle operation. Service information procedures and the use of special tools are emphasized to help increase productivity when returning to the dealership. Basic concepts are not explained unless required for the understanding of the systems that are covered.

Use the information provided in this publication with the latest service information when performing diagnosis or repairs.

Upon completion of this two-day, instructor led-course, you must log into DealerCONNECT under the Training tab and go to the Learning Center in order to complete the review test to receive credit for the course.

COURSE OBJECTIVES

After completing this course, the technician will be able to:

- Recognize proper PCM operation
- Identify PCM inputs and diagnose PCM input concerns
- Identify PCM outputs and diagnose PCM output concerns
- Discuss PCM control system concerns that would prevent the engine from operating properly
- Recognize the speed density equation and how it affects engine operation
- Identify adaptive strategies and their effects on engine operation
- Identify, describe the operation of, and diagnose the electronic throttle control (ETC) system

SIX-STEP TROUBLESHOOTING PROCEDURE

Accurate and consistent vehicle repairs do not happen by accident. They are the result of sound diagnostic practices and principles. The six-step troubleshooting procedure is a time-proven, problem solving method.

Step 1. Verify the Concern

Before any troubleshooting process can progress beyond the first step, it is essential to verify the customer's concern. To verify the concern, it may be necessary to operate the vehicle under the same conditions the customer does when the problem occurs.

It is essential to get an accurate description of the problem condition from the customer. Test driving the vehicle with the customer is also an excellent way to verify the issue.

You should not perform any repairs unless you are able to verify and isolate the problem. An exception to this rule would be when specific service information, such as that found in a Service Bulletin, directs a repair. Under this circumstance, it is permissible to perform a repair when certain conditions exist.

It is permissible to perform a repair when:

- The symptoms described by the customer match those described in the Service Bulletin and no other symptoms are present.
- The model year, the platform, the system, or other identifying descriptions match the Service Bulletin description.

In some cases, the only verification of a problem you may be able to obtain is the presence of a diagnostic trouble code (DTC), which indicates a problem has occurred. If any DTCs are present, you should accurately record them on the repair order.

Verification of a problem may also be limited to the presence of noises or other mechanical factors indicating a problem has occurred.

After verification and throughout the repair process, always keep the original customer concern in mind.

Step 2. Determine Related Symptoms

This step is a continuation of the first step because you are still gathering information and have not performed any repairs. Sometimes the actual fault conditions causing a customer concern affect other systems as well.

Consequently, the repair process should include operational checks of all vehicle systems that are related to the original problem.

Refer to service information and any diagrams to determine how they may be related.

You should be aware of problems that affect only a single function of a system, an entire system, or multiple systems. If you identify multiple problems, attempt to determine how they may be related. When systems share common components, a single repair can often correct multiple conditions.

Step 3. Analyze the Symptoms

Step 3 is dependent on verification of the problem and builds on the information gathered from Steps 1 and 2. During this step, you determine what components are required for the affected system to operate properly by using service information.

Whenever possible, you should use the proper diagnostic tools to verify the operation of each component or system. Each item that functions properly can likely be ruled out as a possible cause of faulty operation.

When analyzing symptoms:

- Use service information to identify the components required for proper operation.
- Use diagnostic tools to verify component and system operation.

When you have an electrical system problem, some of the things you should monitor and attempt to verify are:

- The supporting module or modules are active.
- The supporting switch and sensor states can be detected and are correct.
- The supporting outputs or devices can be actuated and are working correctly.

For mechanical problems, verify that:

- The system operates as intended.
- The supporting components are functioning and intact.
- No bent, broken, or misaligned components are present.

For all problems where there is a DTC, you must determine if the DTC observed relates to the fault condition. Refer to the Possible Causes listed in service information for a description of the conditions that cause the specific DTC to set. With this information, you can then use the diagnostic tools to either associate the DTC to the problem, or clear the vehicle systems and circuits listed in the Possible Causes section as the causes of that DTC. The more complete your interrogation of the vehicle is, the more time you will save later.

When a DTC is set, you must either:

- Associate the DTC to the problem.
- Clear the vehicle systems and circuits listed as the causes of that DTC.

During this step, you should:

- Develop an action plan—it is important to know specifically what must be verified about the vehicle systems based on your interrogation before beginning.
- If possible, identify any component test procedures from service information that may help you identify suspected components.

Step 4. Isolate the Cause

Depending on the problem, Step 4 can have many variables. If proper planning was performed during Step 3, this step should provide positive results.

To isolate the problem area you might:

- Isolate a single component.
- Disassemble part of the vehicle.
- If traced to a specific component, substitute the part with a known good part if possible.

CAUTION: Be aware that swapping certain modules on CAN bus vehicles can result in the loss of the vehicle build configuration, which can disable the vehicle. During the Isolating the Cause phase of the repair process, you must be constantly aware of any vehicle conditions that have changed.

Step 5. Repair the Concern

If all the other steps have been done correctly, this step should usually consist of:

- Replacing the faulty component that was the source of the problem
- Repairing any wire connections or harnesses required
- Reinstalling and securing all removed components

You should consider the cause of the fault condition when making repairs. For example, if incorrect routing of the wiring caused the problem, the repair should include relocating the harness to the correct location to prevent the problem from recurring. Or, if water intrusion caused the condition, you must address the cause of the water entry.

Step 6. Verify Vehicle Operation

This step may require operating the vehicle through the same conditions as Steps 1 and 2.

When verifying proper operation:

- All vehicle systems should be tested, including those that were not officially part of the repair, to determine if the repair procedure caused any undesirable conditions.
- Check for DTCs if any were present originally; a final check should not detect any DTCs.

Notes:

Notes:

DEMONSTRATION 1 CIRCUIT TESTING 101

Follow along as your instructor demonstrates proper measuring techniques to test circuits for voltage, resistance, amperage, and voltage drop.

CIRCUIT VOLTAGE TESTING

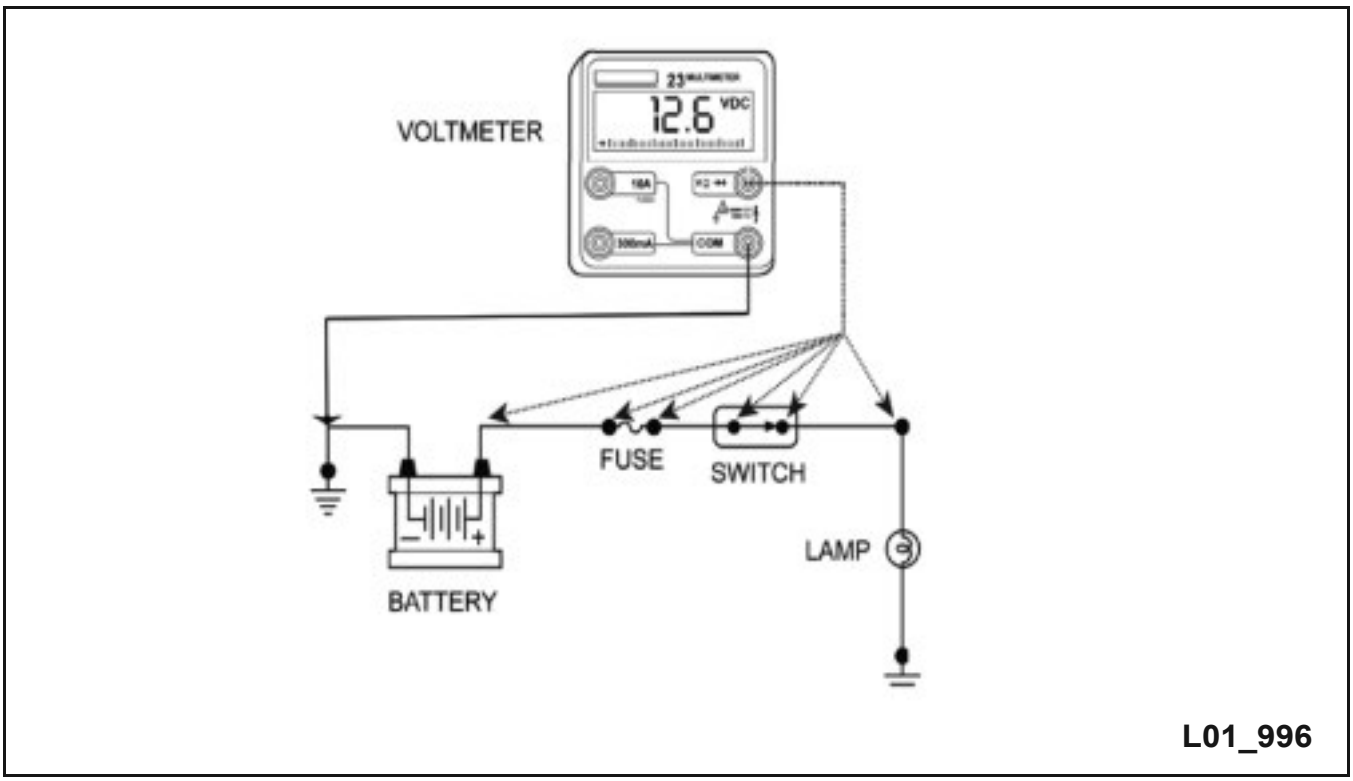

Figure 1 Voltage Testing

Using a multimeter to check a circuit for voltage will show you the available voltage on the circuit. The circuit's integrity and load resistance will determine the flow of current (amperage) within the circuit. Voltage testing shows the potential difference of energy between the source of the voltage and the vehicle ground.

CIRCUIT RESISTANCE TESTING

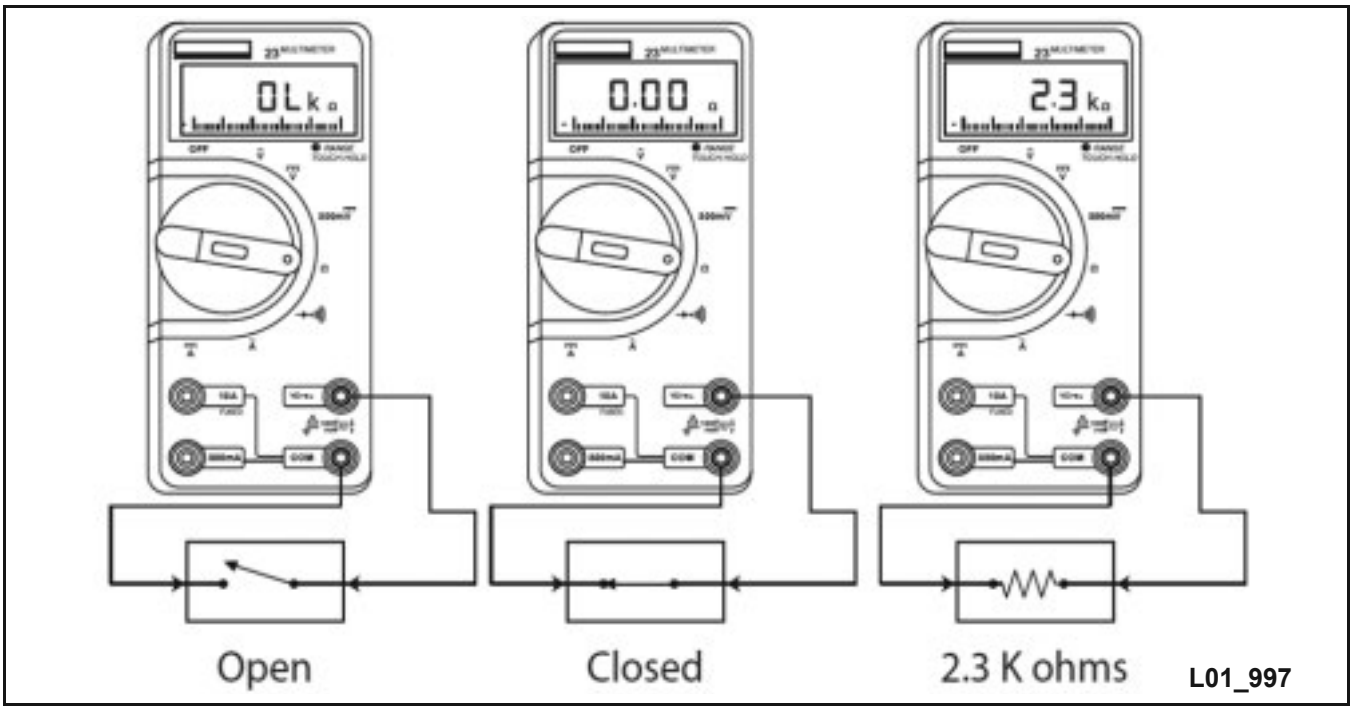

Figure 2 Resistance Testing

Resistance testing should be used only on components that have a specified or inherent resistance. Resistance testing can be useful when checking for corrosion problems, but not very useful when broken wiring is suspected. The multimeter's current output can flow through one strand of wire in a multi-strand wire and show good resistance value, but that same wire will not light a higher load device such as a general test light. This is why voltage drop testing is the preferred method of testing circuit wiring.

NOTE: When testing a circuit for resistance, make sure the circuit is open and no current is flowing.

CIRCUIT AMPERAGE TESTING

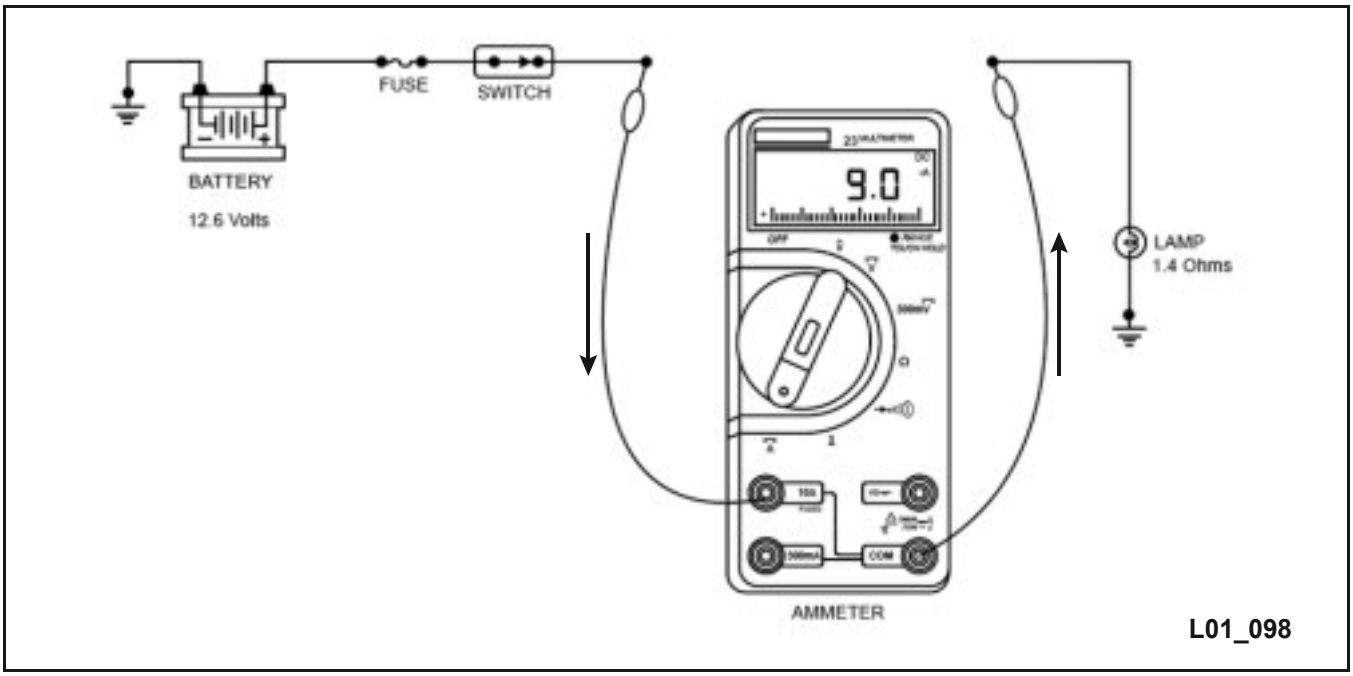

Figure 3 Amperage Testing

When testing circuit amperage, the multimeter becomes part of the circuit being tested; this is why most multimeters have replaceable fuses to protect the meter. Most multimeters can measure up to 10 amps continuously and 20 amps for a short period of time. This measurement will show you how many amps the circuit is drawing. If it is drawing excessively high amperage, there may be a short to ground or a short to another circuit near the one you are testing.

CIRCUIT VOLTAGE DROP TESTING

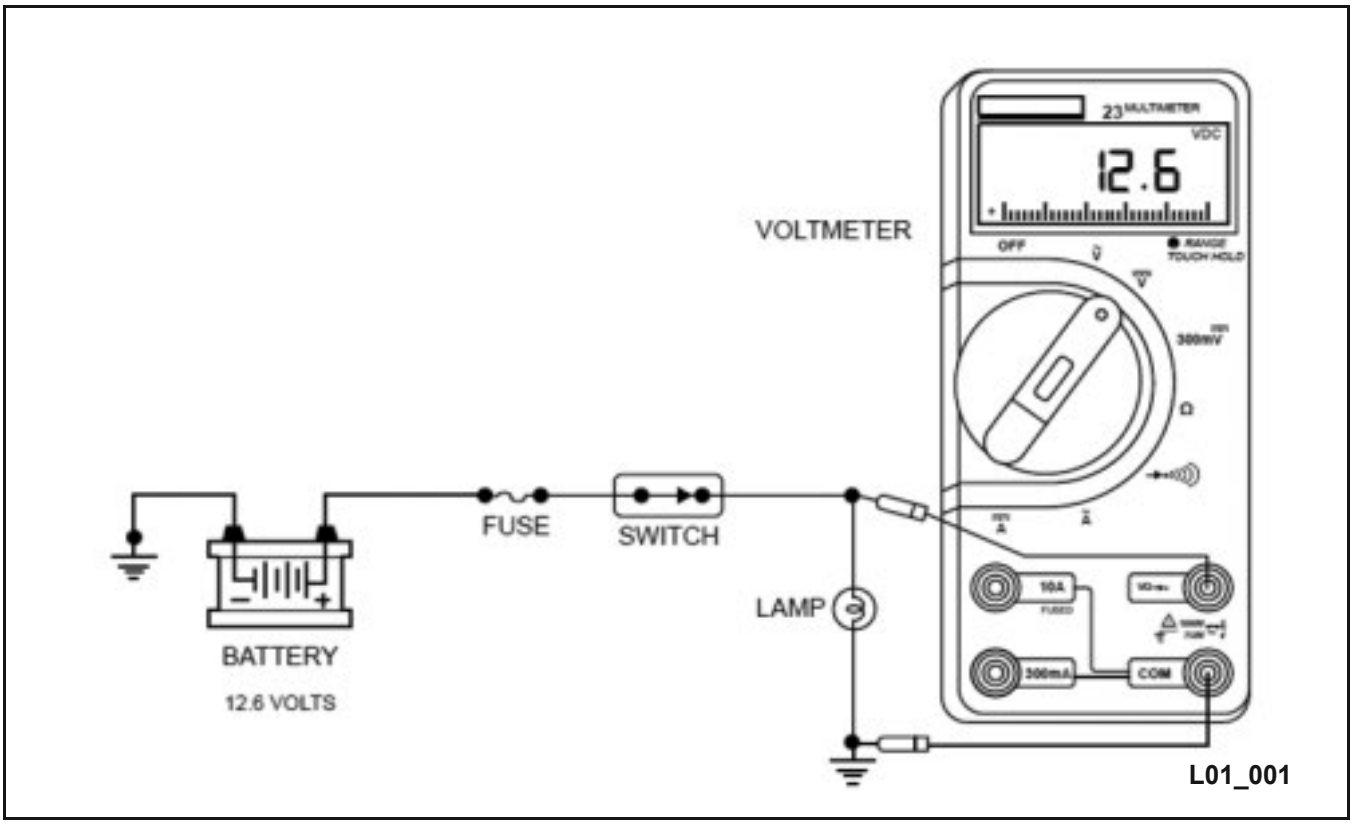

Figure 4 Voltage Drop Testing

You can find high resistance problems in a circuit by performing a voltage drop test. The volt range of the multimeter measures the difference in potential between the two points being tested. Should there be a voltage drop in a piece of wire? Should there be a voltage drop across a light bulb? How about a motor? To answer these questions, think about this: should a piece of wire consume voltage? Does wire in a circuit do any work that would consume voltage? No, wiring should not consume voltage unless it has some other unwanted resistance like corrosion or multiple strands of wire broken within the wire. As a good rule of thumb, wiring should not have a voltage drop greater than 0.2 of a volt (200mV). The loads of the circuit are the only components that should use or consume voltage.

TYPES OF TEST LIGHTS

General test lights put a load on the circuit being tested and can draw up to 2 amps. These test lamps are good for verifying power and ground circuits to higher current devices and should not be used on computer circuits as damage to the circuit or controller may occur.

High-impedance test lights only put a minimal load on the circuit and are used for computer circuit testing. This type of test lamp is good for computer circuits but will light with as little as 10 mA. For this reason, a high-impedance test lamp is not good to use when verifying power and ground supplies to high-current devices.

Logic probes are a high-impedance test light and are very useful to diagnose high-side and low-side driver circuits.

Answer the following questions.

1. What does a voltage drop test tell you about the circuit?

_____

_____

_____

2. What state must the circuit be in to perform a voltage drop test?

_____

_____

3. What state must the circuit be in when performing resistance testing?

_____

_____

4. When testing a circuit for amperage, how do you connect the multimeter?

_____

_____

5. Why is it important to load the circuit being tested when performing a voltage drop test?

_____

Notes:

LESSON 1 POWERTRAIN CONTROL MODULE (PCM)

PCM OPERATION

The PCM is an electronic control unit (ECU) that houses a processor containing software just like a computer. The processor receives information from different sensors within the vehicle, these sensors can be analog or digital and are influenced by operator control or environmental conditions. The PCM monitors these inputs and makes decisions according to its software program. These decisions are then converted to outputs that can be analog or digital; these outputs control the air and fuel that enter the engine and guide it to running within its most efficient parameters under all operating conditions as mandated by government requirements.

The PCM may also contain a transmission control unit that provides input, decision making, and output control to operate the transmission efficiently. Having the units combined allows shared information between the engine and transmission to be quickly communicated via an internal bus, and it also allows for packaging efficiencies.

Speed Density Equation

Air Flow	Fuel Modifiers	Feedback Input	Adaptives	P.W.
$\frac{RPM}{Max\ RPM}$ (X) $\frac{MAP}{Baro}$ (X) Internal EGR	(X) TPS (X) ECT (X) IAT (X) Sensed B+	(X) Up O2	(X) ST (X) LT (X) Purge Vapor Ratio	= Pulse Width

L03_036

Figure 5 Speed Density Equation

Most FCA US LLC vehicles use speed density fuel control systems. This system changes fuel injection quantity largely based on changes in engine speed and load. Other parameters modify the basic fuel calculation. The speed density equation is a representation of how PCMs calculate fuel injector pulse-width in order to maintain a stoichiometric (14.7:1) air/fuel ratio.

PCM Evolution

Powertrain control modules have evolved over time; as inputs increase, processor speed needed to increases to handle the amount of data being monitored and the number of devices being controlled.

Prior to the totally integrated power module (TIPM) based CAN bus applications, the PCMs required the serial communication interface circuits for OEM scan tool communication and flash programming.

When the NGC was first introduced, it was referred to as NGC1; since that time it has had several version changes, including processor improvements. For example, NGC1 had only one 5V supply to feed all the three-wire sensors.

- The NGC2 controller was introduced, without transmission control. This provided space for supporting hardware for the electronic throttle control (ETC) system.
- Later, the NGC3 was released with two 5V sensor supply circuits and a faster processor. It supported ETC as well as automatic transmission control functions.
- NGC4 controllers provide even faster processor speeds along with ETC and automatic transmission control support.
- Venom 1 and 2 controllers for Viper are a variation of the NGC4 controller, and do not need to support automatic transmission control. These controllers are equipped with faster processors and support the mass airflow sensors, additional injectors, coil drivers, skip shift solenoid, and the manual transmission reverse lock-out solenoid.

The more common PCMs available today:

- The GPEC1 PCMs were utilized in vehicles with 1.8-, 2.0-, and 2.4-liter World engines. This PCM supported engine and transmission functions and was phased out in 2010 with the introduction of the GPEC2.
- The GPEC2 PCM offers faster processing speeds and automatic transmission control, but is not equipped to support MultiAir® functions.
- The GPEC3 PCM launched in the 2013 PF with the 2.4-liter engine. This controller looks similar to a GPEC2, but has a physical difference in the case. There is an extension in the back cover to allow for the additional electronics for MultiAir control capability. This controller can be quickly identified by the connector colors; it has one green and one blue connector.
- The 8GMx controller is used in vehicles equipped with a 1.4-liter engine. This controller includes an internal (board-mounted) barometric pressure sensor with a vent that is visible from the external case. At this time, the 8GMx PCM does not have the capability to control automatic transmission functions.

A PCMs original and current VIN should always be the same. Otherwise, someone may have tried to swap a PCM and this may create problems. The PCM is considered the VIN master and new modules get their VIN from the PCM. The scan tool needs a VIN to properly set up the screens and allow full function of the tool. In some cases, if the scan tool is unable to get a VIN from the PCM, it will request a VIN be manually input before further progress is allowed. In other words, a No Response PCM could encounter this scenario.

Regardless of all the version changes, it is imperative that the vehicle has the correct PCM part number and the correct VIN entered into the software.

Next Generation Controller (NGC)

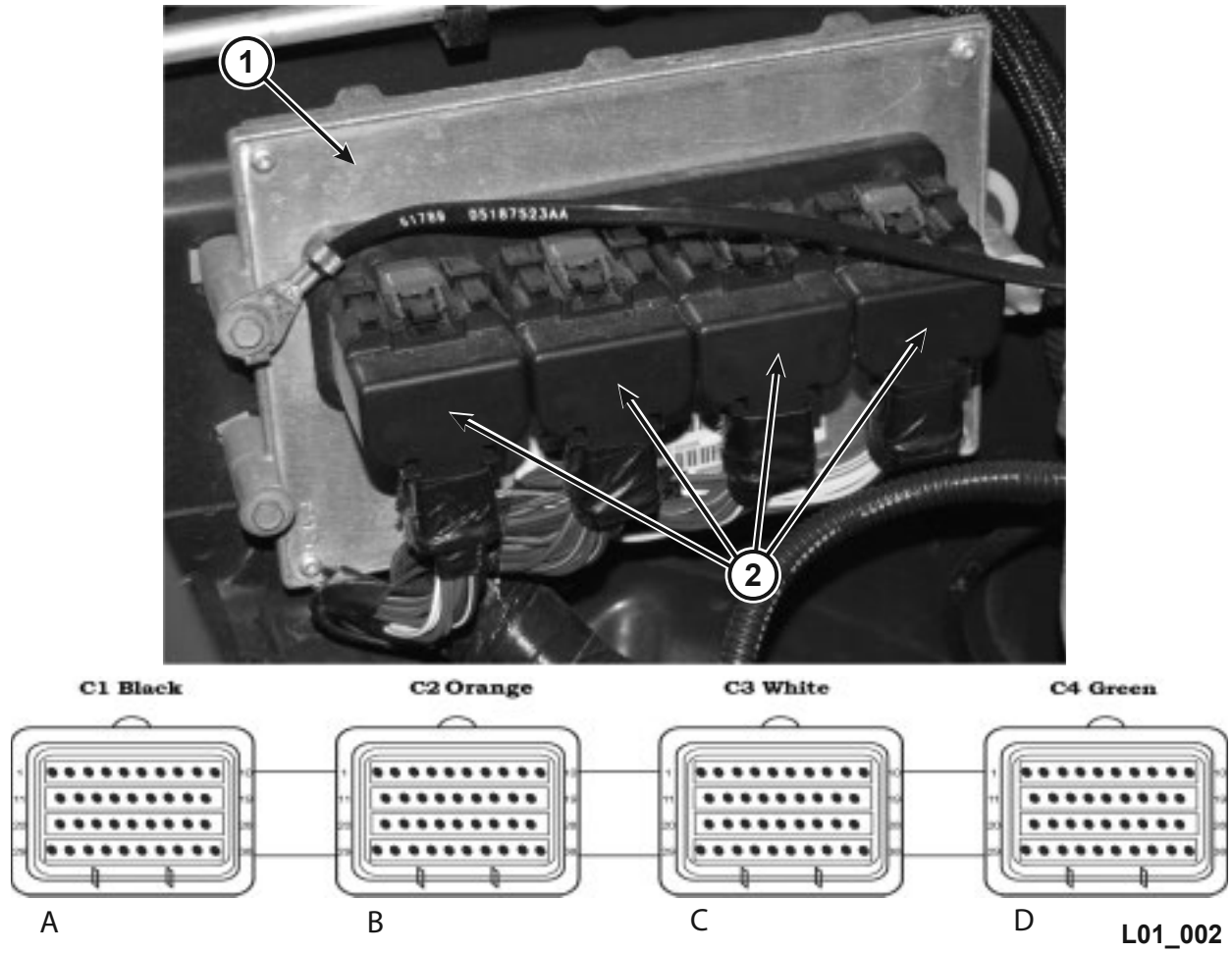

1	Powertrain Control Module	2	Four 38-pin Connectors

Figure 6 NGC PCM (NGC4 shown)

Four 38-pin connectors are used on the NGC PCM. The connectors are identified by color:

- C1 (A) black
- C2 (B) orange
- C3 (C) white
- C4 (D) green

Connector C4 is dedicated to transmission signals. If C4 is not populated with pins, the TCM will be found separate controller, or the vehicle uses a manual transmission. Consult service information for vehicle-specific information.

Global Powertrain Electronic Controller, 1st Generation (GPEC1)

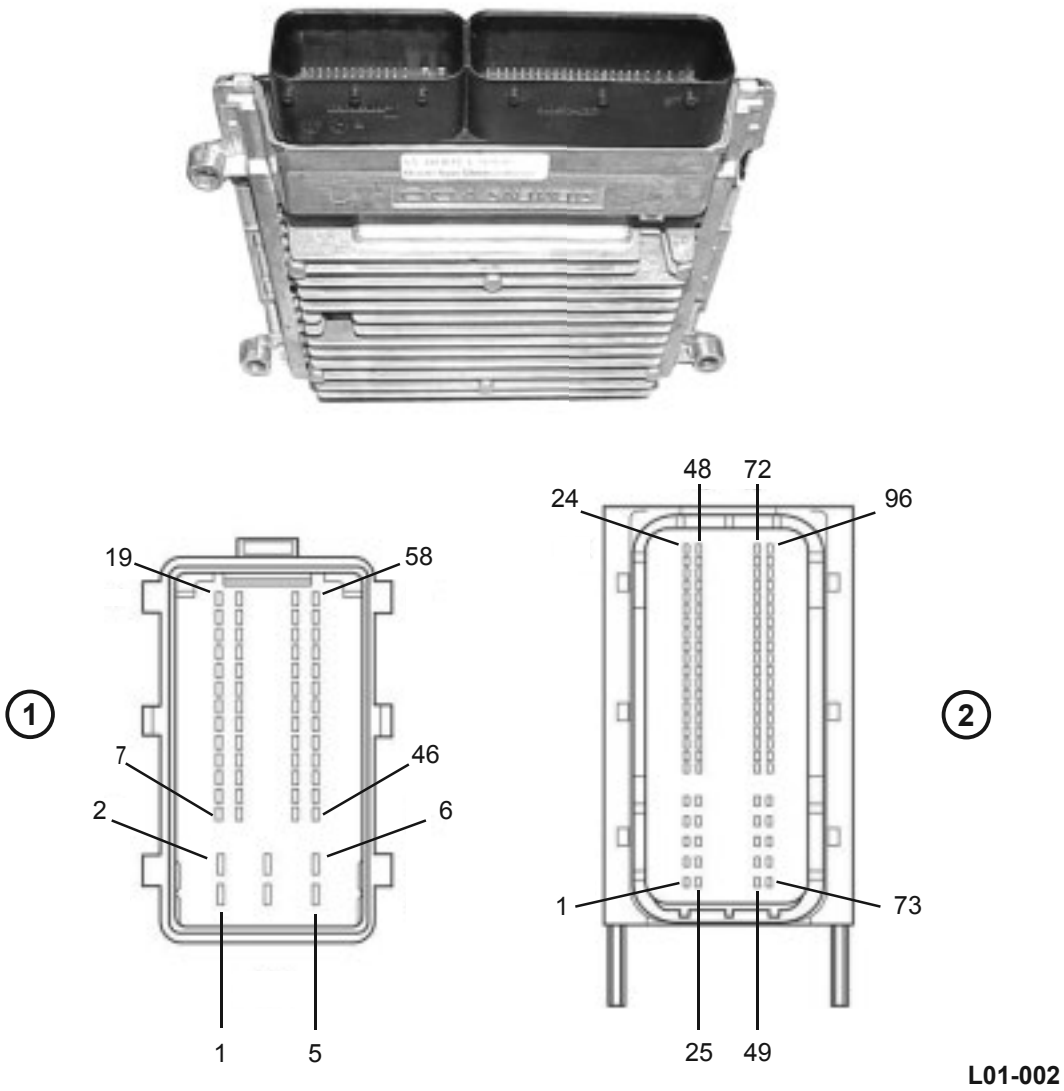

1	Connector 1 (58-pin)	2	Connector 2 (96-pin)

Figure 7 GPEC1 PCM

The global powertrain electronic controller, 1st generation (GPEC1) was used on Caliber, Compass, and Patriot vehicles until the 2011 model year. Two connectors are used on the GPEC 1 PCM: C1 has 58 pins and C2 has 96 pins.

Global Powertrain Electronic Controller, 2nd Generation (GPEC2)

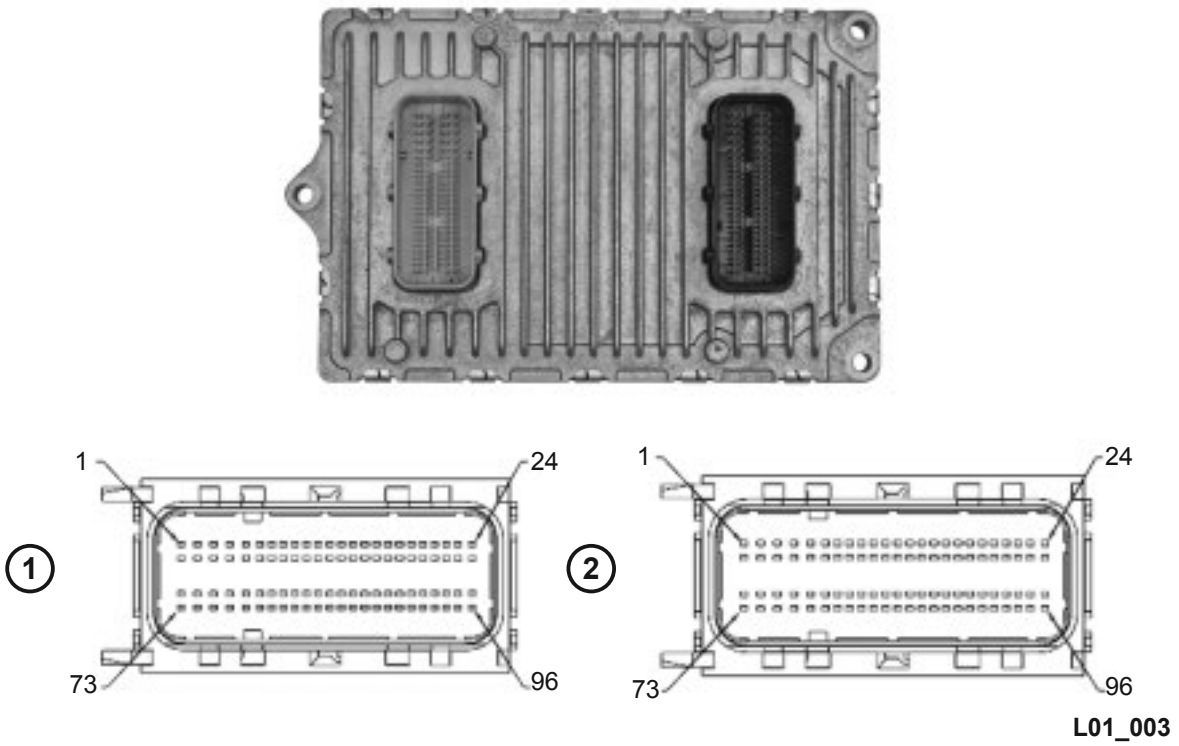

1	Connector 1 (C1/gray)	2	Connector (C2/brown)

Figure 8 GPEC2 PCM

The global powertrain electronic controller, 2nd generation (GPEC2) was introduced on the 2011 LX/LD vehicles.

Two 96-pin connectors are used on the GPEC2 PCM. Connector C1 (gray) is dedicated to chassis circuits, while connector C2 (brown) is dedicated to engine circuits.

NOTE: There is also a GPEC2a version (identified by a tan C1 connector) that is 22 mm wider. The wiring pinouts are different, so caution should be used when replacing or diagnosing the controller.

Global Powertrain Electronic Controller, 3rd Generation (GPEC3)

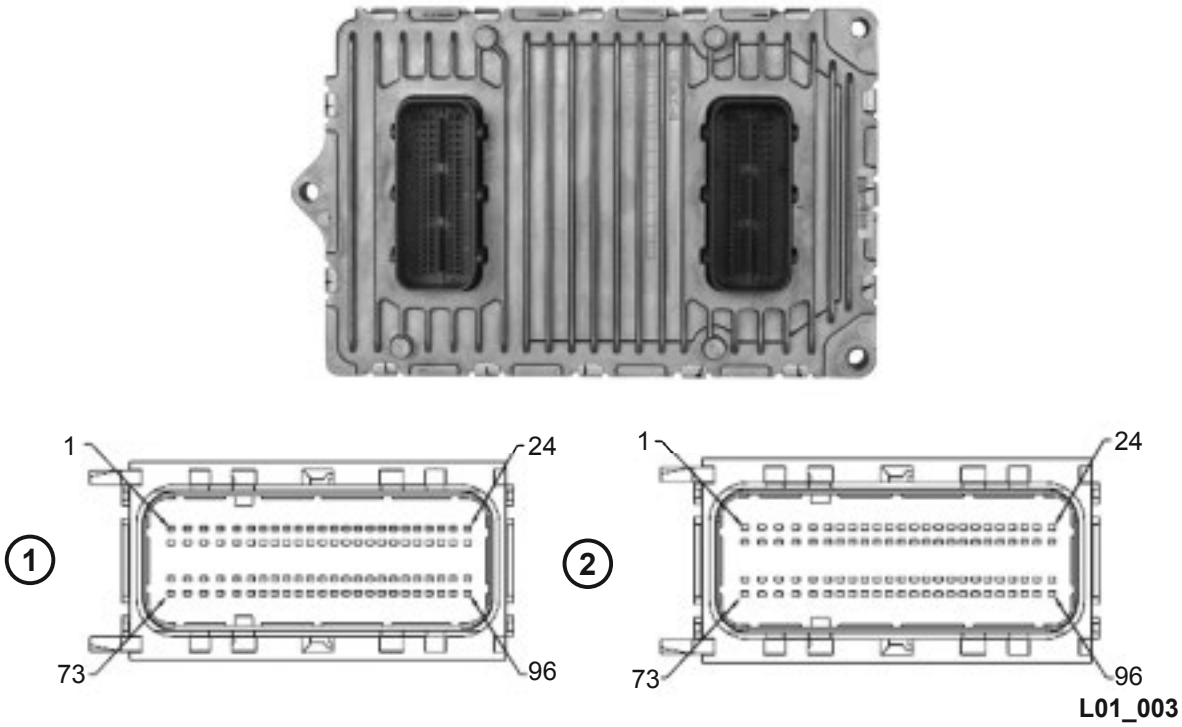

1	Connector 1 (C1/green)	2	Connector 2 (C2/blue)

Figure 9 GPEC3 PCM

The global powertrain electronic controller, 3rd generation (GPEC3) was introduced on the 2013 PF with the 2.4-liter MultiAir engine. This PCM allows for the control of the MultiAir components on the 2.4-liter Tigershark engine. Blue and green 96-pin connectors help identify this controller visually.

8GMx Series Controllers

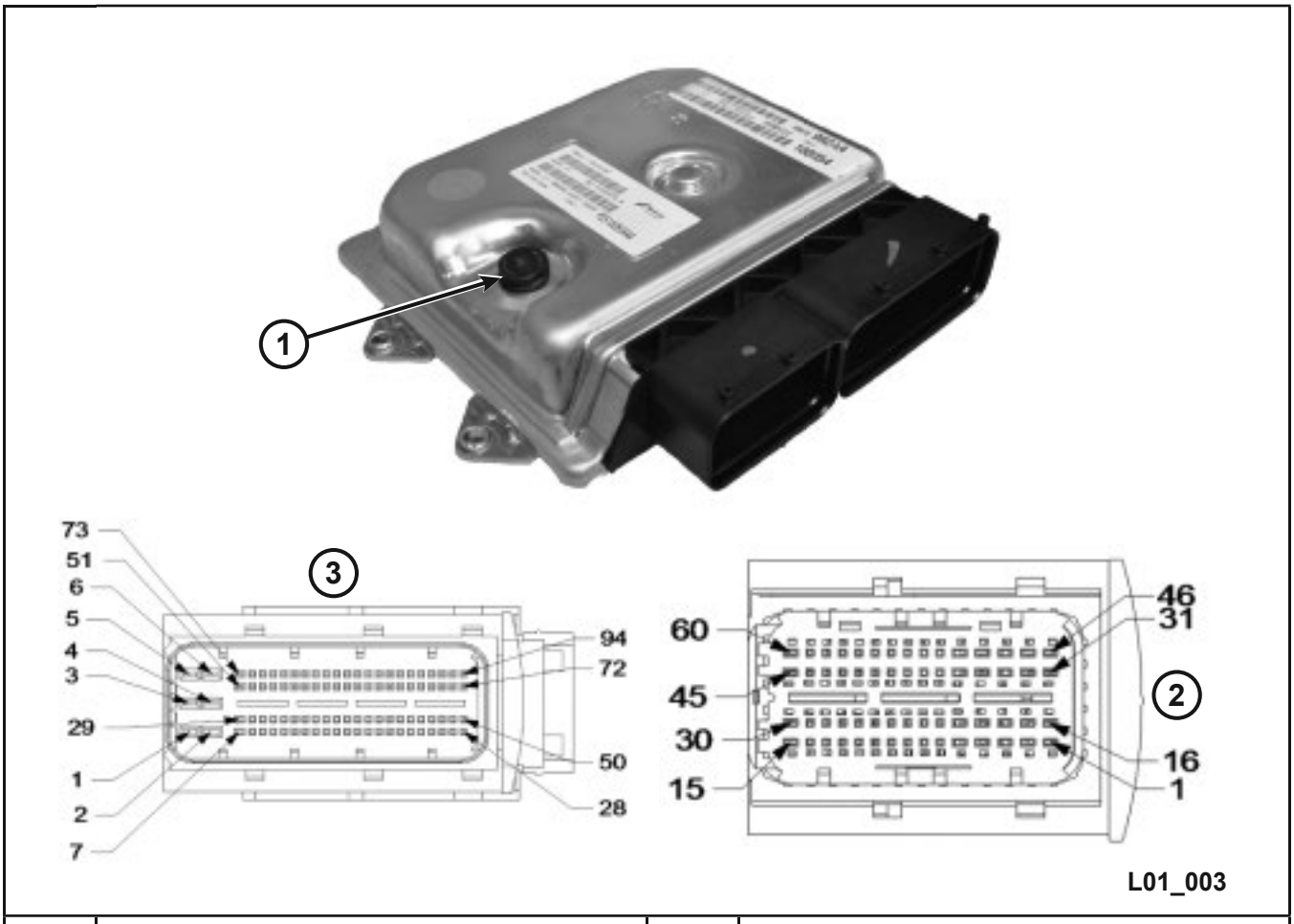

1	Barometric Pressure Sensor	2	Connector 2 (C2)
3	Connector 1 (C1)		

Figure 10 8GMx PCM

The eight gasoline MultiAir (8GMx) PCM is used on FIAT and some FCA US LLC vehicles equipped with the 1.4 liter engine. Similar to the GPEC controller, there are different variants represented by the x in 8GMx. Unlike the other controllers, the 8GMx includes an integral barometric pressure sensor that is not serviced separately. The bullets below define the x character and the different variations used for this engine:

- 2012–2013 Naturally aspirated 1.4-liter engines use an 8GMC controller.
- 2013 1.4 liter turbocharged engines use an 8GMW controller.
- 2014 and newer naturally-aspirated and turbocharged engines use an 8GMK controller.

These PCMs do not have the functionality to handle transmission control. Applications using these controllers will have a separate transmission controller.

One 94-pin connector and one 60-pin connector are used on the 8GMx series PCMs.

SPECIAL TOOLS

NGC Pinout Box #8815

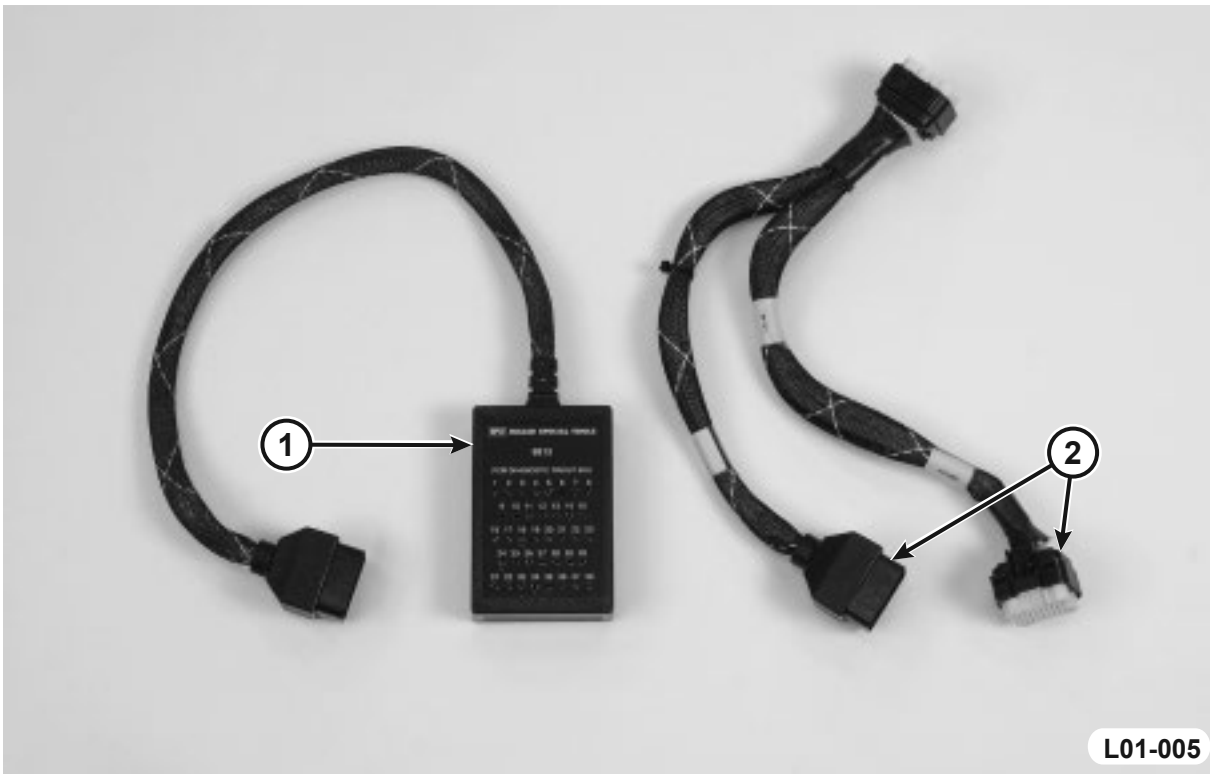

1	Special Tool #8815 Pinout Box	2	Special Tool #8815-1 Pinout Box Adapter Cable

Figure 11 Pinout Box and Adapter

When performing wiring harness diagnostics, it is important not to probe or back probe the connector. Connector damage will occur if this procedure is not followed. Two special tools have been designed for these connectors: Special Tool #8815 Pinout Box and Special Tool #8815-1 Pinout Box Adapter Cable. These special tools allow you to perform wiring harness tests. The Special Tool #8638 Terminal Pin Removal Tool is used to remove the terminal pins from the PCM connectors.

NOTE: When jumping circuits for diagnostics using the pinout box, you must use a fused jumper wire with no more than a 10-amp fuse installed.

GPEC 2/3 GPEC Diagnostic Adapter #10436

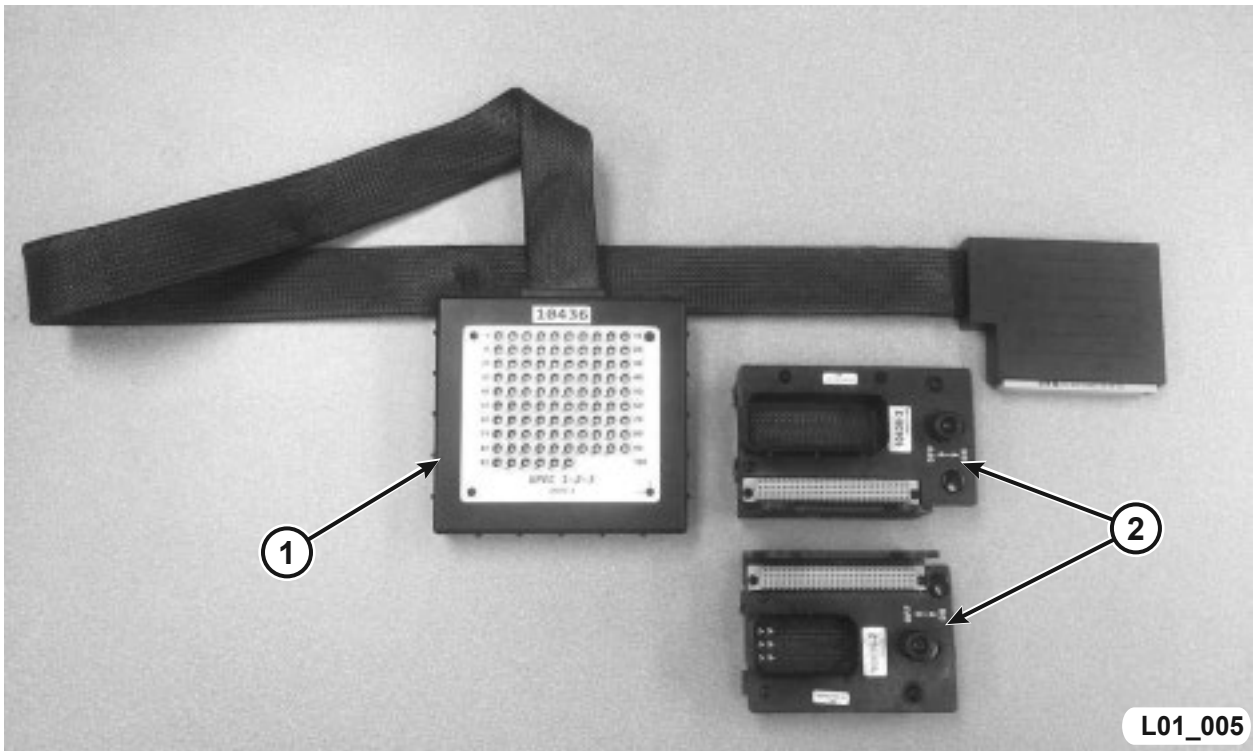

1	Special Tool #10436-1 GPEC Diagnostic Adapter	2	Special Tool #10436-2 and #10436-3 Adapters

Figure 12 Special Tool #10436-1 GPEC Diagnostic Adapters

The Special Tool #10436-1 GPEC Diagnostic Adapter should be used to test circuits at the PCM of GPEC1, GPEC2, and GPEC3 controllers.

NOTE: When jumping circuits for diagnostics using the pinout box, you must use a fused jumper wire with no more than a 10-amp fuse installed.

CAUTION: When installing the GPEC Diagnostic Adapter between the PCM and the harness, be sure that the connectors are aligned properly to prevent terminal pin damage. Removal of the PCM fasteners may be required to gain unobstructed access to the connectors.

Special Tool #8197A Terminal Pin Removal Tool Kit (FCA US LLC)

L01_006

Figure 13 Special Tool #8197A Terminal Pin Removal Tool Kit

The Special Tool #8197A Terminal Pin Removal Kit is used to access terminal pins within most connectors equipped on FCA US LLC vehicles. See section 29-Non-DTC Diagnostics for the applications and proper usage of these tools.

Special Tool #10300 Terminal Pin Removal Tool Kit (FIAT)

L01-006

Figure 14 Special Tool #10300 Terminal Pin Removal Tool Kit

This kit is used to access terminal pins within most connectors equipped on FIAT vehicles. See section 29-Non-DTC Diagnostics for the applications and proper usage of these tools.

VERIFYING PCM POWER, GROUND, AND COMMUNICATION CIRCUITS

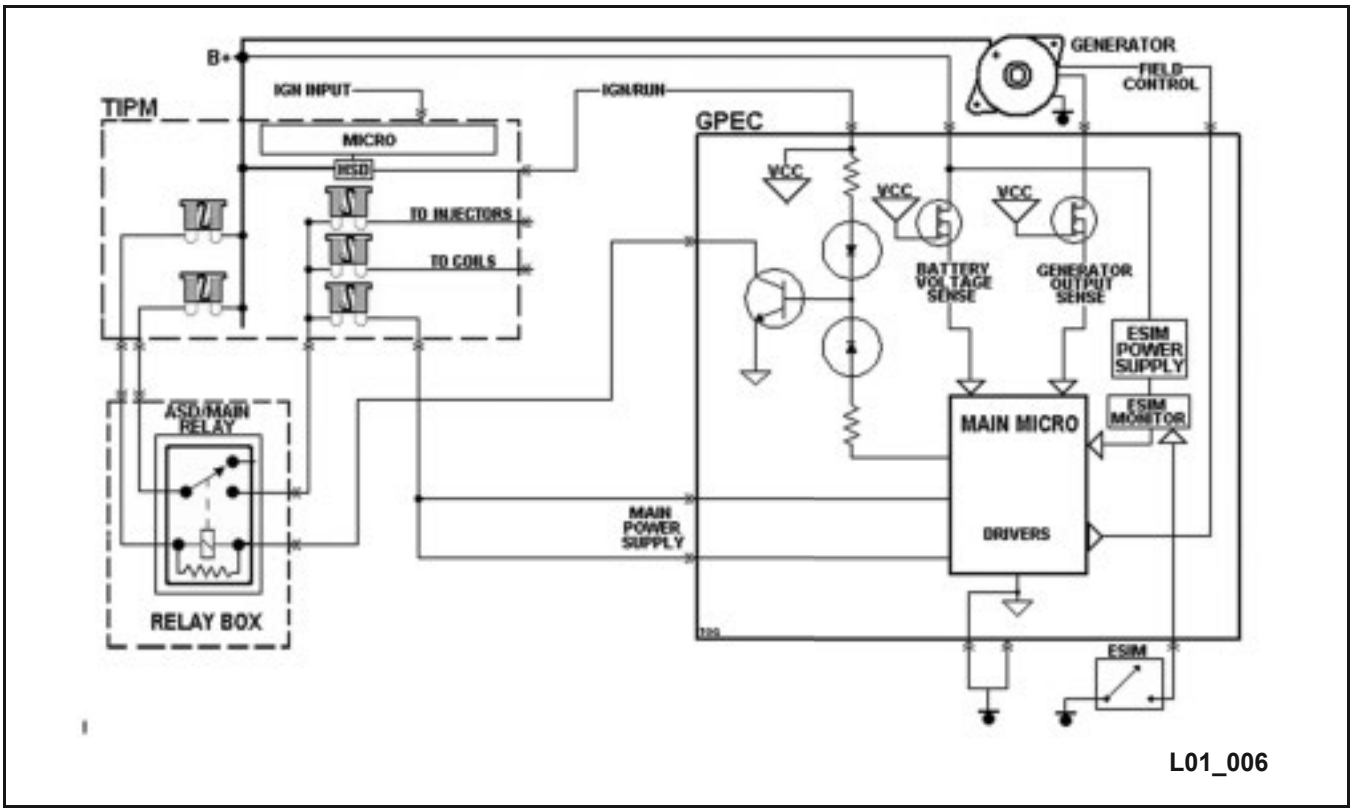

Figure 15 GPEC1 Power and Ground Connections

Power and Ground Circuits

PCMs have multiple circuits that supply power and grounds. It is important to know what types (ignition or battery feed for power circuits), how many, and where these connections are on the vehicle. If one or more of any type of circuit is faulty, the PCM could have diagnostic trouble codes (DTCs) that may be triggered by components not getting their 5V reference voltage. It could also be caused by the PCM not being able to turn an output on or off, depending on what type of driver (high-side or low-side) and components are in the circuit.

Sensor ground circuits need to be verified when multiple sensor DTCs have been triggered. Sensor ground circuits are ground circuits are filtered by components within the PCM that remove noise and other disturbances from the sensor circuits. They could inadvertently trigger DTCs or cause glitches within the sensor circuits.

Power and Ground Diagnosis

Figure 16 Voltage Drop Across Ground Terminal - DMM Set to DC Volts

Most ground conditions can be diagnosed by performing a voltage drop test across the ground terminal at the PCM and the termination point of the ground. The ground lead may share a common termination point or a splice. Confirmation of power and ground circuits are critical before attempting to replace any control module. However, there must be electrical current flowing in the circuit to perform the voltage drop test. To perform the test properly, turn the ignition switch to the RUN or START position to ensure the circuits being tested are under a load. You CANNOT perform a voltage drop test if the circuit is OPEN. If the voltage drop is too high, a check of the termination points and splices should be performed. If there is a splice between the PCM ground and the ground termination point, and the voltage drop on the circuit is too high, check the splice for loose wires or corrosion. If the termination points are dirty or corroded, clean the termination points and perform the voltage drop test a second time to verify the repair. Voltage drop should be no greater than 200 mV on any section of the circuit wiring being tested. When in doubt, compare the readings to a known good vehicle.

Notes:

Notes:

ACTIVITY 1 DIAGNOSING PCM CIRCUITS USING A DIGITAL MULTIMETER

TASK ONE: PCM POWER AND GROUND DIAGNOSIS - GPEC2 VEHICLE

Using applicable service information, locate and record the following information for the PCMs connectors. This information applies to the PCM microprocessor only, not the TCM microprocessor.

When diagnosing a no-start condition due to an unresponsive PCM, it is important to be able to identify the correct vehicle architecture, including other modules that are responsible for a PCMs ability to power up and communicate.

1. Using a multimeter, record the values in the Measurements with Key in Position column below while observing the proper position of the ignition switch.

NOTE: Check the following with the ignition switch in the appropriate position.

NOTE: When testing in the START position, disable the fuel pump so the vehicle does not start or use the MIN/MAX function on the multimeter.

Function	Connector/ Cavity	Circuit #/Wire Color	Measurements with Key in Position			
			OFF		RUN	START
Fused Ign. RUN/ START						
ASD Control Output						
ASD Control Output						
ASD Control Output						
ASD Relay Control						
Fused B+						
Ground (PCM)						
Ground (PCM)						

2. With the ignition in the OFF position, short Fused B+ to the ignition RUN/START circuit at the GPEC connector. Describe what happens to the main relay control ASD fused main relay outputs.

_____

_____

3. What was just tested by providing power to the ignition RUN/START circuit at the GPEC connector?

_____

_____

4. Using service information, locate the sensor ground circuits.

Connector	Connector/Cavity	Circuit #/Wire Color	Function
			Sensor Ground
			APP Sensor Ground 2
			APP Sensor Ground 1
			Knock Sensor 1 Return
			Throttle Position Sensor Return
			Sensor Ground
			Sensor Ground

5. Using service information, locate the 5-volt supply circuits of the GPEC.

Connector	Connector/Cavity	Circuit #/Wire Color	Function
			5V Supply
			5V Supply
			5V Supply
			5V Supply
			5V Supply

6. In addition to being used as a power source for the low-side drivers and as a diagnostic input to the PCM, what other functions does the ASD or main relay have?

_____

7. Using service information, locate the bus communications circuits of the GPEC2 controller.

Connector	Cavity	Circuit #/Wire Color	Function	Voltage Measurement
			CAN-C -	
			CAN-C +	

8. What is the significance of the sensor ground circuits?

9. After a PCM is replaced, what procedures need to be performed? How are they performed?

10. If the PCM power and ground connections have been verified and the PCM will not communicate with the scan tool, what external factor could cause this situation?

TASK TWO: PCM POWER AND GROUND DIAGNOSIS 8GMX VEHICLE

1. Using a multimeter, record the values in the Measurements with Key in Position column below while observing the proper position of the ignition switch.

NOTE: Check the following with the ignition switch in the appropriate position.

NOTE: When testing in the START position, disable the fuel pump so the vehicle does not start or use the MIN/MAX feature on the multimeter to capture the voltages during the start procedure.

Function	Connector/ Cavity	Circuit #/ Wire Color	Measurements with Key in Position:			
			OFF	ACC	RUN	START
Fused Ign. RUN/ START						
ASD Control Output 1						
ASD Control Output 2						
ASD Control Output 3						
ASD Relay Control						
Fused B+						
Ground (PCM)						
Ground (PCM)						
Ground (PCM)						

2. Using service information, list the connector, cavity, circuit number, and wire color for these sensor circuits.

Connector	Cavity	Circuit #/Wire Color	Function
			Knock Sensor Return
			5V Engine Sensor Primary Feed
			5V Engine Sensor Secondary Feed
			Sensor Ground
			CKP Sensor Ground

3. Using service information, locate the bus communications circuits of the 8GMX controller.

Connector	Cavity	Circuit #/Wire Color	Function	Voltage Measurement
			CAN-C -	
			CAN-C +	

4. In addition to being used as a power source for the high-side drivers and as a diagnostic input to the PCM, what other functions does the ASD or main relay have?

_____

5. What is the difference in the operation of the main relay and a traditional ASD relay?

_____

_____

6. What is the significance of the sensor ground circuits?

_____

_____

7. After a PCM is replaced, what procedures need to be performed? How are they performed?

8. If the PCM power and ground connections have been verified and the PCM will not communicate with the scan tool, what external factor could cause this situation?

9. What functions does the ASD relay provide?

10. What is the significance of the sensor ground circuits?

Notes:

Notes:

LESSON 1 POWERTRAIN CONTROL MODULE (PCM) (CONTINUED)

OBDII OVERVIEW

J1962 Data Link Connector (DLC)

The PCM maintains communication with scan tools through the vehicle data link connector (DLC). The DLC connector is located under the instrument panel, near the steering column.

Table 1 Data Link Connector Terminal Assignments

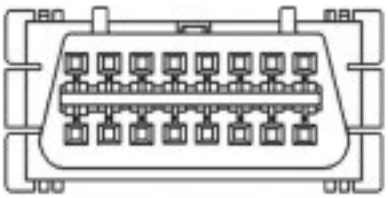

	J1962 Data Link Connector Pin Location	Configuration A (1994–2002 MY)	Configuration B* CAN Bus (2002 MY +)	TIPM-based CAN Bus	PowerNet/CUSW CAN Bus
Pin #	Terminal Assignment and Function	Production			Dev/Prod
1	Mfr. Discretionary	RKE Program Input	Not Used/Empty	Not Used/Empty	Not Used/Empty
2	SAE J1850 (+)	SAE J1850 (+)	SAE J1850 (+)	Not Used/Empty	Not Used/Empty
3	Mfr. Discretionary	CCD (+)	Not Used/Empty	Not Used/Empty	CAN-IHS (+)
4	Chassis Ground	Power Ground	Power Ground	Power Ground	Power Ground
5	Signal Ground	Signal Ground	Signal Ground	Signal Ground	Signal Ground
6	ISO 15765/CAN-C (+)	SCI A Rx	ISO 15765-4/ CAN-C (+)	Diagnostic/CAN-C (+)	CAN-C (+)
7	K-line	ISO 9141-2, K-line/ SCI Tx	SCI Tx (engine)	Not Used/Empty	Not Used/Empty
8	Mfr. Discretionary	A/D Signal Output/ Switched Ign.	Switched Ignition	Not Used/Empty	Not Used/Empty
9	Mfr. Discretionary	SCI B Rx/J1850 Flash Enable	SCI Rx (trans)/ J1850 Flash Enable	Not Used/Empty	Not Used/Empty
10		SAE J1850 (-)	SAE J1850 (-)	Not Used/Empty	Not Used/Empty
11	Mfr. Discretionary	CCD (-)	Not Used/Empty	Not Used/Empty	CAN-IHS (-)
12	Mfr. Discretionary	SCI C Rx	SCI Rx (engine)	Not Used/Empty	Not Used/Empty
13	Mfr. Discretionary	Low Side Driver/ SCI Tx	Not Used/Empty	Not Used/Empty	Not Used/Empty
14	ISO 15765/CAN-C (-)	SCI D Rx	ISO 15765-4/ CAN-C (-)	Diagnostic/CAN-C (-)	CAN-C (-)
15	L-line	Inverted SCI Tx	SCI Tx (trans)	Not Used/Empty	Not Used/Empty
16	Permanent Positive Voltage	Battery Voltage	Battery Voltage	Battery Voltage	Battery Voltage

Beginning with the introduction of the NGC PCM in model year 2002 vehicles, FCA US LLC vehicles switched over to a new J1962 DLC connector layout to comply with a revised SAE specification. This was required for the introduction of the controller area network (CAN) bus. Pins 6 and 14 were originally designated as manufacturer-specific by SAE, but were recalled to be used for the CAN bus. This forced a relocation of the SCI bus circuits that were previously assigned to these terminals. Refer to the appropriate service information.

DIAGNOSTIC TROUBLE CODES (DTCS)

Table 2 Diagnostic Trouble Code Format

P	0	1	23
P=Powertrain B=Body C=Chassis U=Network	0=Generic DTCs (same for all manufacturers) 1=Manufacturer-specific DTCs 2=SAE controlled 3=SAE controlled	0=Total System 1=Fuel and Air Metering 2=Fuel and Air Metering 3=Ignition System and Misfire 4=Auxiliary Emissions Controls 5=Vehicle Speed and Idle Regulation 6=Control Module and Output Signals 7=Transmission 8=Non-powertrain Faults 9=Control Modules, Input and Output Signals	00=ZZ Specific Fault Designation

Diagnostic trouble codes (DTCs) are stored in PCM memory whenever an abnormal condition within a system is detected. SAE standard J2012 and the EPA define OBDII standards for the five-digit alphanumeric DTC codes.

DTCs can help speed diagnosis by identifying which systems are affected by the fault. The malfunction indicator light (MIL) illuminates when a DTC is set, based on monitor failure criteria.

SAE J2012 requires a uniform DTC format. This format assigns alphanumeric codes to malfunctions and suggests standard definitions for all generic (SAE universal) DTCs. Manufacturers can also assign their own unique DTCs. The second digit indicates whether the DTC is generic or manufacturer-specific.

Table 2 shows a sample of what the pieces of a DTC mean. Technicians diagnosing other vehicle systems may find DTCs with two additional characters at the end of the normal five-digit code. The additional sub-codes are indicators of a circuit fault detected by the reporting module.

Types of Faults

Comprehensive components are typically sensors, switches, solenoids, and relays that are monitored continuously by the PCM. Circuits attached to comprehensive components are tested for:

- Open circuits
- Shorts to ground
- Shorts to power

Any circuit abnormality detected causes a DTC to set. For example, P0107 MAP SENSOR LOW can be caused by an open in the 5V supply, the supply circuit, or signal circuit shorted to ground.

When one of the above faults is detected, the PCM immediately illuminates the MIL. When the fault is no longer active, the MIL will be turned off in three good trips.

Input Rationality

In addition to continuity checks, the PCM also checks powertrain component inputs for rationality. This means the input signal is compared against other inputs and stored information to see if it makes sense under the current conditions.

Sensor inputs that are checked for rationality include:

- Manifold absolute pressure (MAP) sensor
- Crankshaft position (CKP) sensor
- Camshaft position (CMP) sensor
- Vehicle speed sensor (VSS)
- Engine coolant temperature (ECT) sensors
- Intake air temperature (IAT) sensor
- Engine oil temperature (EOT) sensor
- Throttle position sensors (TPS)
- Accelerator pedal position (APP) sensors
- Ambient air temperature (AAT) sensor
- Oxygen sensors
- Oxygen sensor heaters
- Power steering pressure switch
- Brake switches
- Park/neutral switch
- Transmission controls
- EVAP pressure sensor
- Fuel level sensor
- Fuel tank pressure (FTP) sensor
- Fuel rail pressure sensor

Output Functionality

The PCM tests outputs for functionality as well as circuit continuity. When the PCM supplies a voltage or ground to an output component to perform a function, it can verify that the command was carried out by monitoring specific input signals for expected changes.

For example, when the PCM commands the electronic throttle control (ETC) throttle blade to change position under certain operating conditions, it expects to see a specific engine speed. If it does not, a DTC is triggered.

Outputs that are checked for functionality may include:

- Fuel injectors
- Ignition coils
- Electronic throttle control (ETC)
- Relays
- Torque converter clutch (TCC) solenoid
- Solenoids
- Exhaust gas recirculation (EGR) system
- Fuel Pump Control Module
- Electric air pump
- Cooling fan control
- Transmission controls

DTC and MIL Strategies

Two-trip Failures (Pending and Active Self-clearing DTCs)

The Trip is essential for running monitors and extinguishing the MIL. In OBD II terms, a trip is a set of vehicle operating conditions that must be met for a specific monitor to run. All trips begin with a key cycle.

If the PCM detects an emissions-related component fault or system fault on two consecutive trips, it illuminates the MIL and sets a DTC. In addition to comprehensive component faults that illuminate the MIL immediately upon detecting the fault, other components or emission-related systems must fail the diagnostic monitor test on two consecutive trips for the MIL to illuminate. These tests are two-trip monitors.

When the first test fails, the task manager stores a Pending DTC. If the component fails for a second time on the next trip, the DTC becomes Active and the MIL is illuminated. Non-emissions-related monitor tests illuminate the MIL after a single failure. These tests are known as one-trip monitors. A DTC is set and the MIL is illuminated after one failure.

Good Trips

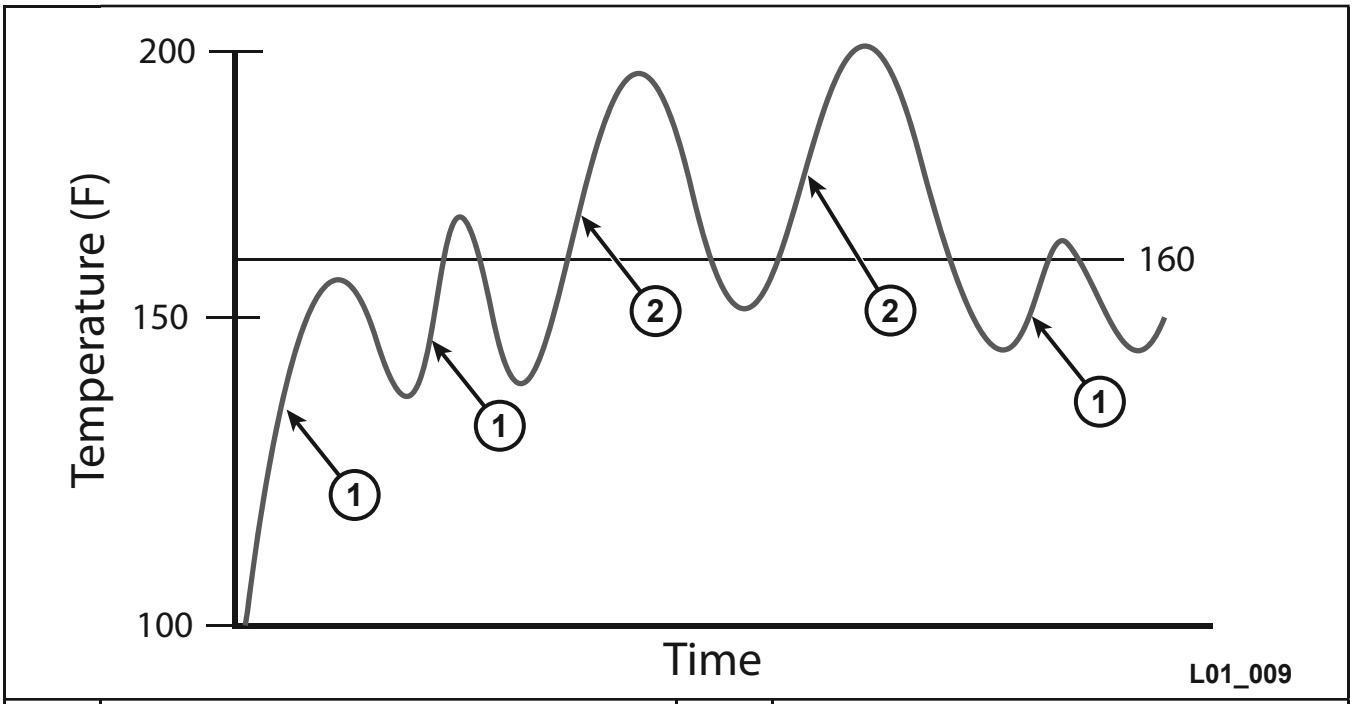

1	Incomplete Warm-up Cycle	2	Complete Warm-up Cycle

Figure 17 Warm-up Cycle for Good Trip

To achieve a good trip for comprehensive components, typically the fault must be corrected. This can be accomplished by utilizing the scan tool data or performing an actuator test to evaluate the repair. The engine must run for at least 2 minutes (with no faults) and then a key cycle must be performed. Good trip information is located in the Environmental Data screen. Double click the DTC listed on the scan tool under the All DTCs tab.

Warm-up Cycles

If the component or system failure does not reoccur after three consecutive good trips, the MIL is turned off, but the stored DTC remains in memory. If the failure does not repeat after 40 warm-up cycles (coolant temperature must begin below 71 °C [160 °F] and increase above 71 °C [160 °F] with a minimum of at least 4.5 °C [40 °F] change), the DTC is erased from memory.

Clearing DTCs with Scan Tools

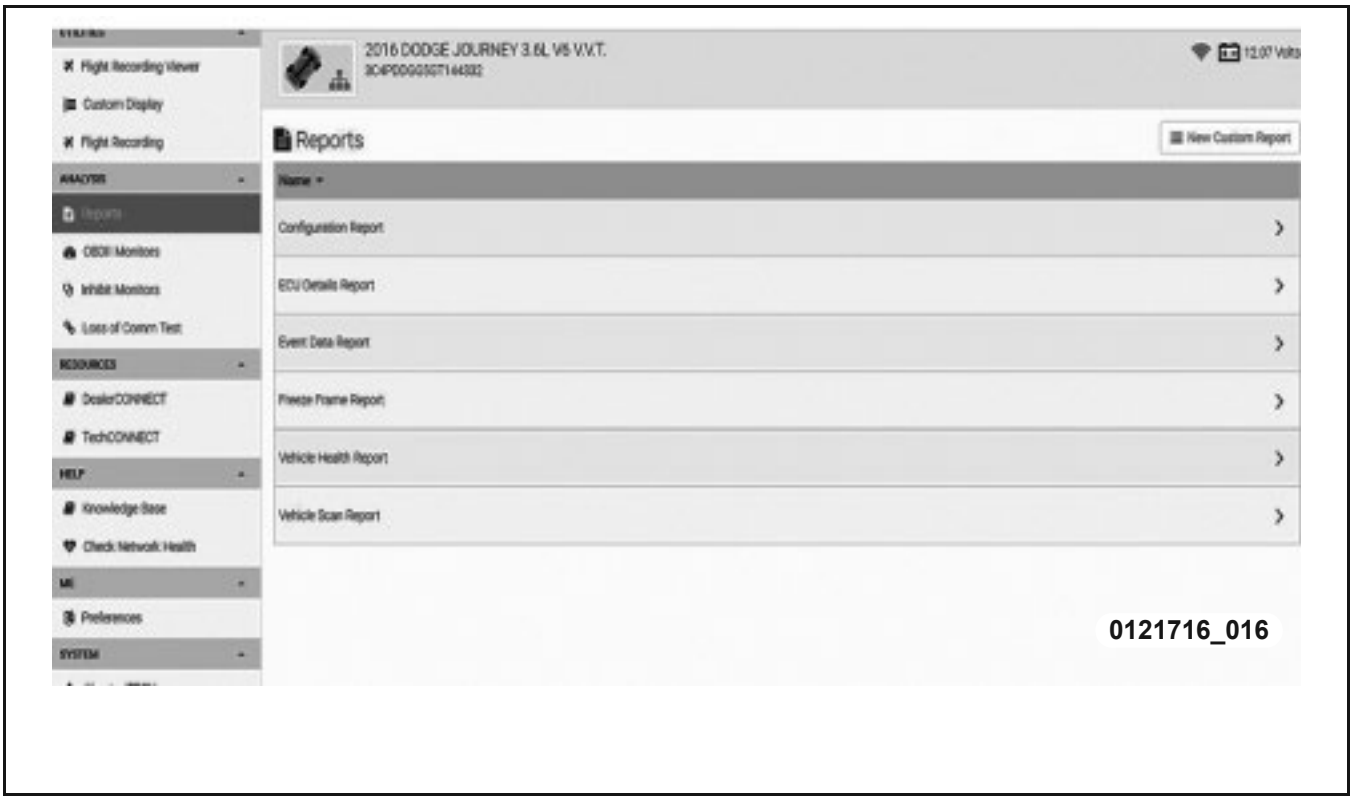

Figure 18 Scan Report on wiTECH™ 2.0

DTCs can be erased at any time with a scan tool. Erasing the DTC also erases all stored OBD II monitor information. This includes all counter information for warm-up cycles, start cycles, trips, Freeze Frame data, and monitor completion data. Prior to clearing DTCs, a vehicle scan report will provide a copy of the DTCs and applicable information that may be valuable later on after the DTCs have been erased.

Flashing MIL

With ignition ON/engine off for 15 seconds, if the MIL is flashing, it means that the OBD II monitors have not run and completed. Intermittent power or ground problems can cause this to occur, but the monitors will still have to be run for the MIL to remain on with key ON/engine off.

Freeze Frames

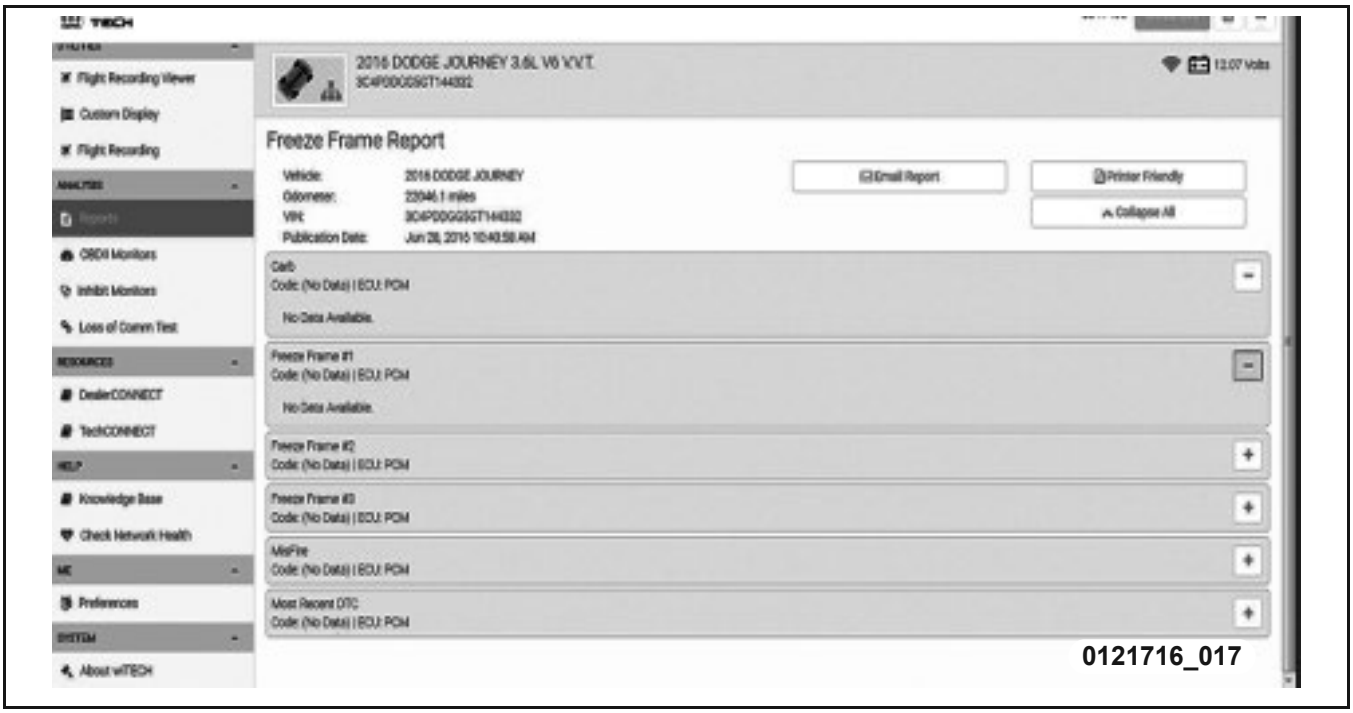

Figure 19 Freeze Frame Data on wiTECH™ 2.0

When a fault is detected, the input data from various inputs and outputs is stored in the PCM Freeze Frame memory, along with the date and odometer of the fault.

Data stored in Freeze Frame is usually recorded at the first occurrence. If the fault is a two-trip fault, the MIL will not illuminate until after the second occurrence, but Freeze Frame data is stored after the first occurrence. CARB Freeze Frame data is only overwritten by a different fault with a higher priority.

Freeze Frame data may include:

- Open-closed loop or closed-loop
- Calculated load
- Engine coolant temperature
- Short-term adaptive
- Long-term adaptive
- Manifold absolute pressure
- Engine speed
- Vehicle speed
- DTC
- Freeze Frame priority

Freeze Frame Rules

Beginning with the NGC PCM, there are five Freeze Frame locations. The CARB Freeze Frame is the highest priority, regardless of order. Freeze Frame number 1 is the first failure, regardless of priority. Freeze Frame 2 is the second failure, Freeze Frame 3 is the third failure, and the most recent failure is the last Freeze Frame. An intermittent or chronic condition could fill all five Freeze Frames with the same DTC, but sna pshot conditions and priority could vary. Current rules state that for a two-trip fault in the CARB-mandated Freeze Frame, only the priority is updated, not the data. EPA and CARB rules may change, so consult service information for the latest information.

Table 3 Freeze Frame Rules

	CARB Freeze Frame	**Freeze Frame 1**	**Freeze Frame 2**	**Freeze Frame 3**	**Freeze Frame 4**
Order of Occurrence	Order of Occurrence Does Not Matter	First Failure	Second Failure	Third Failure	Most Recent Failure
Priority	Priority Does Matter	Priority Does Not Matter	Priority Does Not Matter	Priority Does Not Matter	Priority Does Not Matter
Type of DTC	Could Be Pending Failure or DTC	Could Be Pending Failure or DTC	Could Be Pending Failure or DTC	Could Be Pending Failure or DTC	Could Be Pending Failure or DTC

NOTE: The service required interval (SRI) mileage is entered in a Freeze Frame. This is a PCM mileage counter that updates after so many miles of continuous driving.

Clearing Freeze Frame Data (GPEC1)

On most vehicles, erasing DTCs with a scan tool also erases the Freeze Frame data. On vehicles equipped with a GPEC1 controller will NOT erase DTCs or Freeze Frame data by disconnecting the battery. The GPEC1 stores OBDII information in nonvolatile memory. OBDII information can only be erased with a scan tool or by running three good trips and 40 warm-up cycles.

DTC Priorities

CARB has mandated that DTCs are entered and ranked according to priority (the worst emissions offenders). Certain DTCs with higher priority overwrite lower priority DTCs.

Non-emission-related failures have the lowest priority. One-trip failures of two-trip faults have the next level of priority, followed by matured two-trip failures. One-trip and two-trip failures of fuel system and misfire monitors have higher priority over non-fuel-system and non-misfire faults.

Table 4 DTC Priorities

Priority		Description
Low	0	Non-emission-related DTC
	1	One-trip failure of a two-trip fault, not for fuel system or misfire
	2	(currently not used)
	3	Two-trip failure or matured fault, not for fuel system or misfire
	4	One-trip failure of a two-trip fault, for fuel system and misfire
	5	(currently not used)
High	6	Two-trip failure or matured fault, for fuel system and misfire

Multiple DTC Diagnosis

When more than one DTC is set, it is very important to research the possible connections between the codes. For example, if you have DTCs for a system, a component, and a circuit, they are most likely connected. Even if they are from different systems, they could share wiring and possibly the same fault. The proper order for this process is as follows:

- Record DTCs and save Freeze Frame information; then clear DTCs and retest because this will verify current faults are present.
- Identify common systems and components.
- Identify common component circuits.
- Identify common DTC description information (circuit high, low, etc.).

This will give you the information to diagnose a multiple-DTC concern properly through the process of elimination.

Upon completion of the repair, and before returning the vehicle to the customer, verify the original faults have not reset (this may require ensuring the one-trip monitor has completed testing) .

PCM SERVICE

Figure 20 Original VIN and Current VIN on wiTECH™ 2.0

PCM REPLACEMENT

Replacement PCMs now require programming with a scan tool. The PCM does not operate until programmed and a NOT PROGRAMMED DTC is set.

CAUTION: Before programming (flashing) a PCM, always verify that the correct software for the vehicle configuration and PCM is being used. Flashing a PCM with incorrect software may prevent some vehicle features from operating and, in some cases, may cause damage. Many PCMs are replaced incorrectly because of scan tool issues or problems with communication between the scan tool and the PCM.

CAUTION: When replacing a GPEC controller on a Compact US Wide (CUSW) vehicle, a PROCSI alignment must be performed.

The scan tool (wiTECH™ 2.0) shows the original and current PCM VIN under the PCM/Details tab. These should always be the same. Otherwise, someone may have tried to swap a PCM and that may create problems. With most vehicles, the PCM is considered the VIN master and new modules get their VIN from the PCM. Also, the scan tool needs a VIN to properly set up the screens and allow full scan tool functionality. In some cases, if the scan tool is unable to get a VIN from the PCM, it will request a VIN before further progress is allowed. A NO RESPONSE condition in the PCM may result.

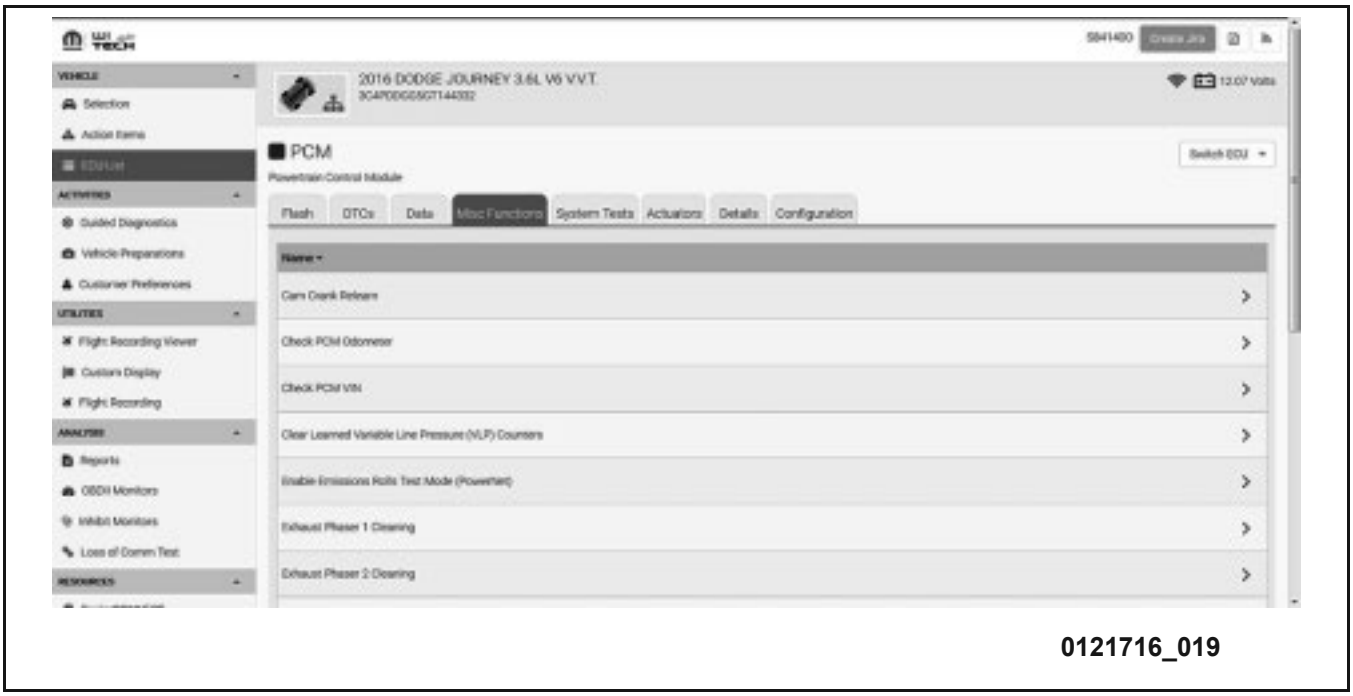

Figure 21 wiTECH™ 2.0 Check VIN in Misc Functions

PCM replacement typically requires specific steps to be completed in addition to flashing the correct software in the new PCM:

- Must program VIN through WCM (SKIM)
- Must enter service reminder indicator mileage
- Relearn ETC if applicable
- Pinion factor (early non-CAN)
  - On later models (CAN), the pinion factor is programmed in the front control module (FCM).

When replacing the PCM, always follow the specific procedure in TechCONNECT section 8E.

CAUTION: Vehicles equipped with WCM require a specific procedure for writing the VIN in the PCM.

PowerNet vehicles only require the PCM VIN entry in the PCM Misc screen on wiTECH™ 2.0.

FLASH PROGRAMMING

When a flash is entered into a new PCM, you can only update that software version. For example, if you selected a flash for a V6 engine, there is no way to change the program to work on a V8. The battery voltage is critical during the flash, and battery charger usage is recommended during the procedure. The newer battery chargers have a special mode for flashing that reduces electrical noise while the charger is operating.

NOTE: Refer to section 8E-Electronic Control Modules > Standard Procedure when programming modules.

Notes:

Notes:

DEMONSTRATION 2 FREEZE FRAME DATA

TASK ONE: FREEZE FRAME ANALYSIS

This demonstration will allow students to review information that is captured in Freeze Frame data after a DTC is set. This information is useful when diagnosing DTC faults. Information that is recorded, such as mileage, key cycles, and run time are available to help determine the root cause of the concern.

1. When the instructor set a fault in the vehicle, what was the Malfunction indicator lamp (MIL) status?

_____

2. With the scan tool connected, were there any DTCs stored? Write down any DTCs that were recovered.

_____

3. Is there any Freeze Frame data stored?

_____

4. How will this aid in diagnosing the vehicle concern?

_____

Notes:

LESSON 2 PCM INPUTS

The PCM receives inputs from sensors and switches that inform the PCM about physical conditions such as temperatures, speeds, and the position of various components. This information influences the PCMs output decisions. Inputs can be either a sensor (analog) input or a switch (digital) input. An analog sensor input will generate or modify a varying voltage signal that is sent to the PCM, whereas a switch or digital input will send a HIGH/LOW or ON/OFF signal to the PCM.

PCM DIGITAL INPUTS

Hall-effect devices are three-wire, digital sensors that are frequently used for digital PCM inputs where accuracy and fast response are important. Hall-effect devices provide the PCM with digital inputs that do not need analog-to-digital conversion.

The PCM supplies 5V to the Hall-effect sensor. This voltage powers the Hall-effect chip and the electronics in the sensor. A ground for the sensor is provided through the sensor ground circuit. The signal to the PCM is on a 5V reference circuit. The Hall-effect sensor contains a powerful magnet. As the magnetic field passes over the dense portion of a counterweight, flex plate, or trigger wheel, the 5V signal is pulled low to approximately 0.3V through a transistor in the sensor. When the magnetic field passes over the notches in the crankshaft counterweight, flex plate, or trigger wheel, the magnetic field is lost, turning off the transistor in the sensor and supplying the PCM with a 5V signal.

Typical CKP/CMP Sensor Circuit

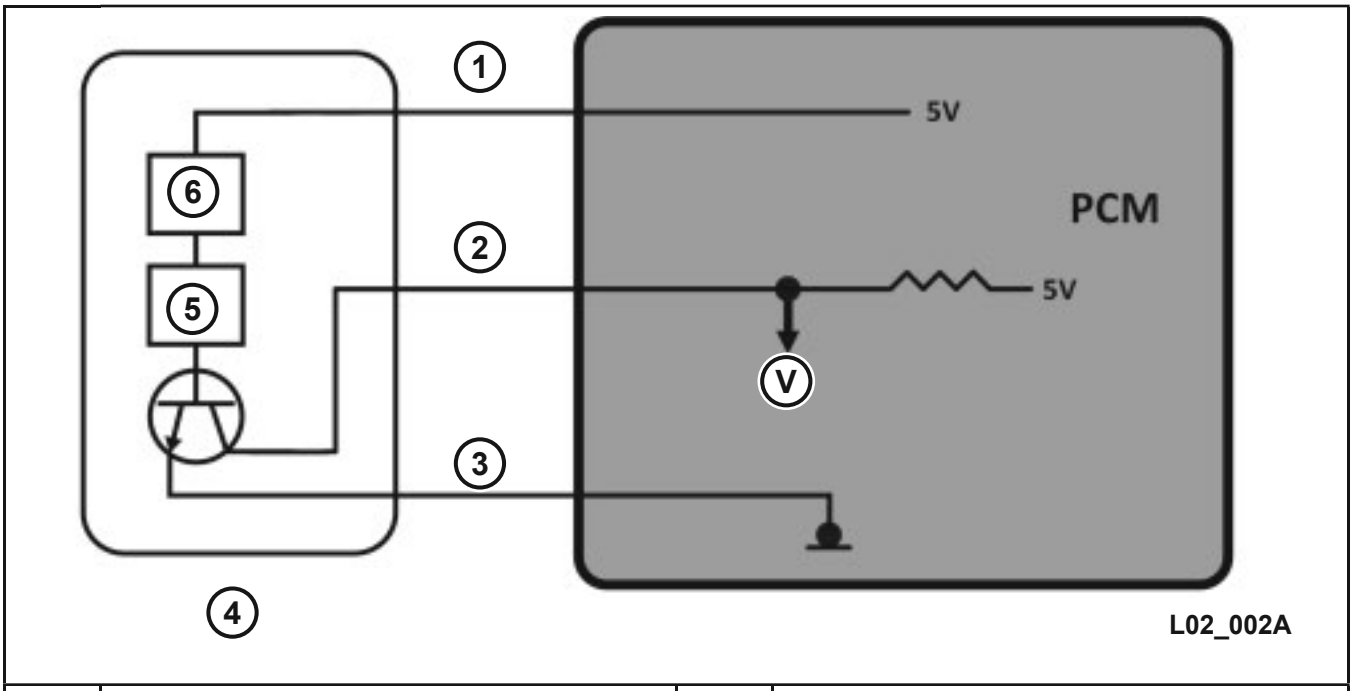

1	5V Reference Voltage	4	Camshaft or Crankshaft Position Sensor
2	Signal Circuit	5	Hall-effect Switch
3	Ground Circuit	6	Voltage Regulator

Figure 22 CMP and CKP Sensor Circuits

Crankshaft Position (CKP) and Camshaft Position (CMP) Sensors

The CKP and CMP sensors are Hall-effect switch inputs to the PCM. Hall-effect devices toggle the 5V reference from the PCM on and off.

Each Hall-effect switch is a three-wire sensor. One wire is the 5V power supply. This feed powers the internal electronics. Each sensor will share a common sensor ground wire. The remaining wire on each sensor is an individual signal wire.

Crankshaft Position (CKP) and Camshaft Position (CMP) Triggers

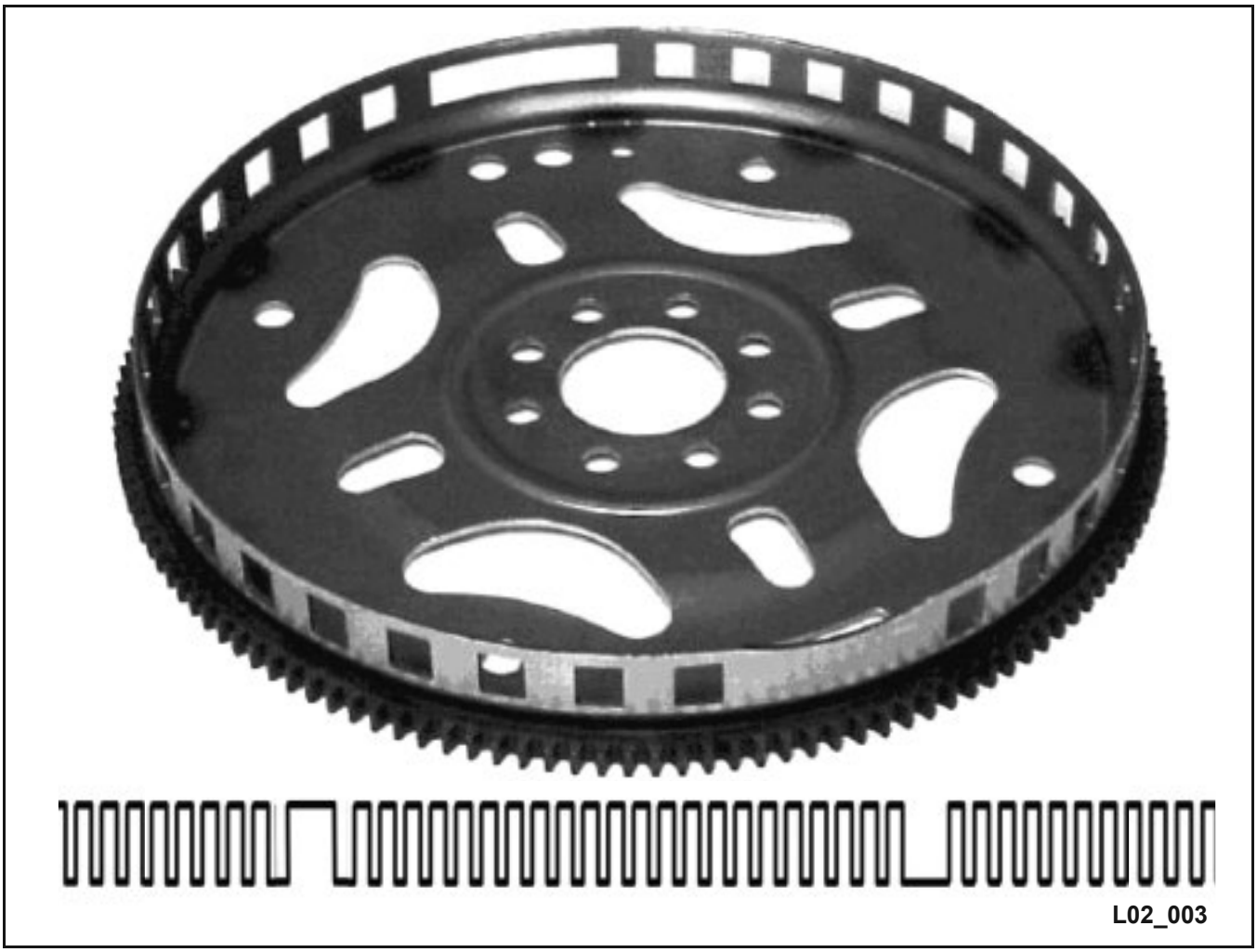

Figure 23 Typical CKP Trigger Wheel

The CKP trigger, using the CKP sensor signal, determines engine position and speed. The triggering device, whether a flex plate or a tone wheel, will have a tooth or notch that represent a specific amount of degree of crankshaft rotation.

CKP Trigger Wheel

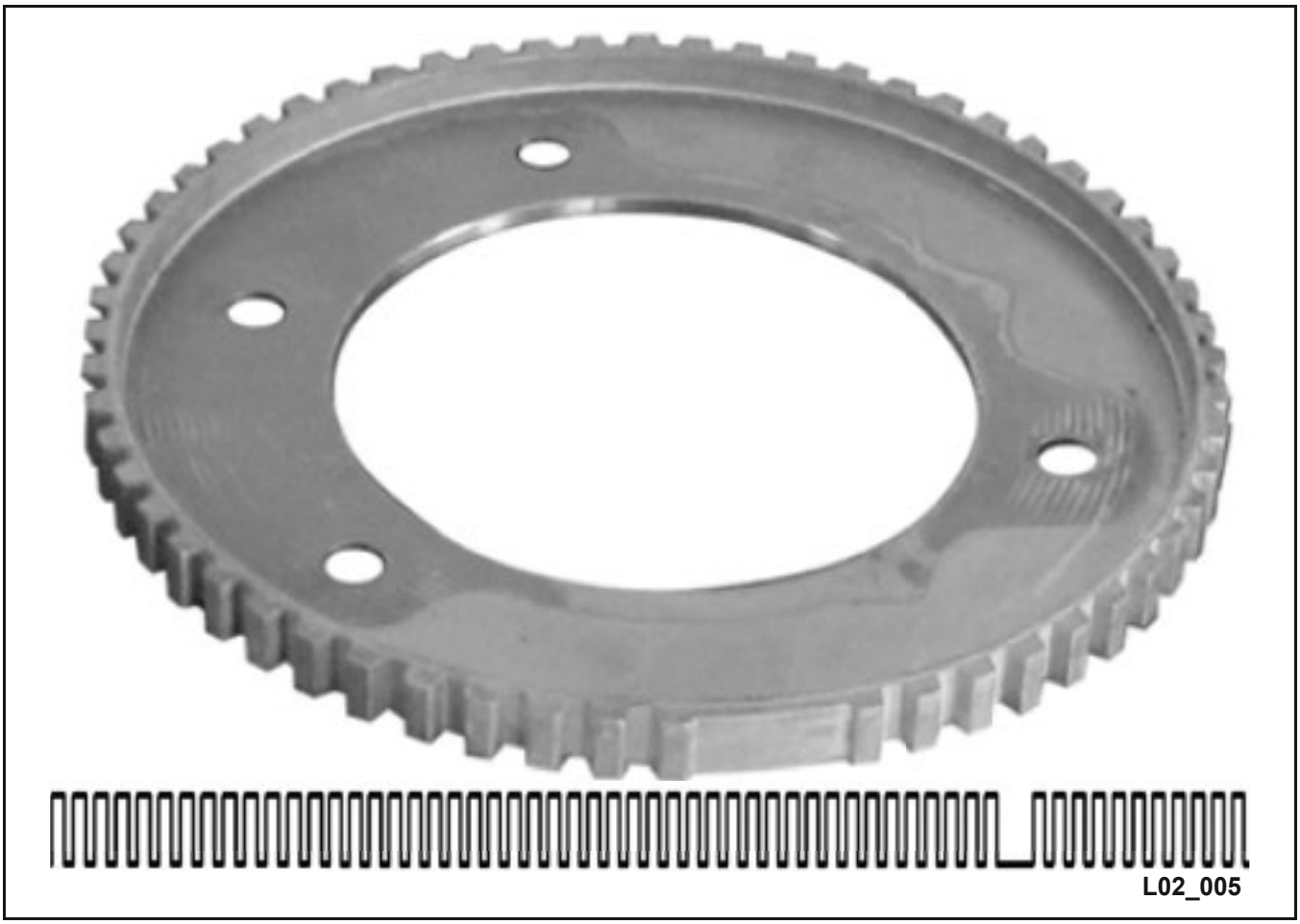

Figure 24 Typical 58X CKP Trigger Wheel

The crankshaft sensor senses crankshaft position based on the position of a tone wheel that has 60 minus 2 teeth, or 58X. In this case, the tone wheel is located inside the engine crankcase; other examples are externally mounted. When the gap created by the missing teeth passes by the sensor, a signal is produced that indicates the number one piston is at top dead center (TDC).

Bi-directional Crank Sensor and Trigger Wheels

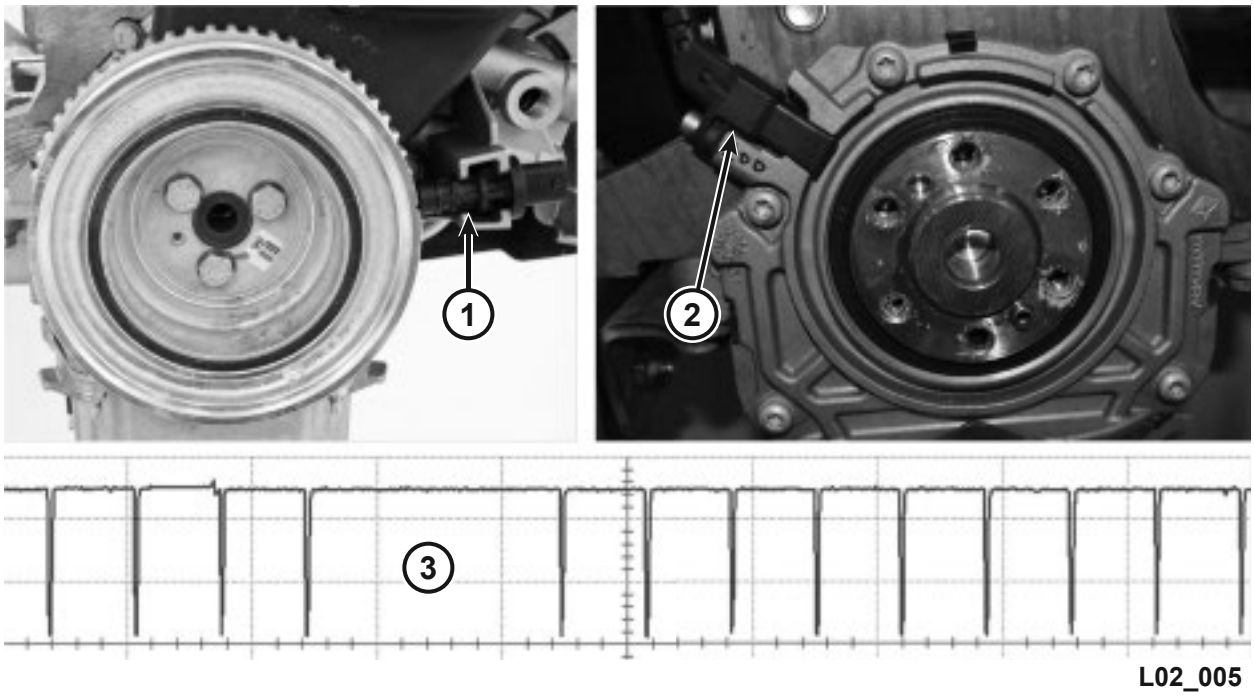

1	First Generation Bi-directional Sensor	3	Pattern in a Forward Direction
2	Second Generation Bi-directional Sensor		

Figure 25 Bi-directional CKP Sensors and Trigger Wheels

Beginning in 2013, some applications utilize a bi-directional crankshaft sensor. The bi-directional CKP sensor is a device that generates a highly accurate crankshaft position resolution that is dependant on the direction as well as speed of the crankshaft.

Because vehicles equipped with stop/start are required to start within one crankshaft revolution, this type of sensor is used instead of a standard crank sensor. The bi-directional sensor can also be found in non-stop/start applications. Vehicles that use this type of sensor exhibit quicker start times.

Vehicles equipped with bi-directional sensors also have PCM programming that allows the module to read the unique crank signal pattern. One of the biggest differences in the patterns is that low logic pulse remains the same regardless of engine speed. The only time the low logic pulse changes duration is if the crankshaft rotates backwards. This will be present in an engine as it nears 0 rpm during an engine shut-off.

- Engine rotating forward = 45 +/- 8 microseconds (µs) - low logic pulse
- Engine rotating backward = 90 +/- 15 microseconds (µs) - low logic pulse

CMP Trigger Wheel

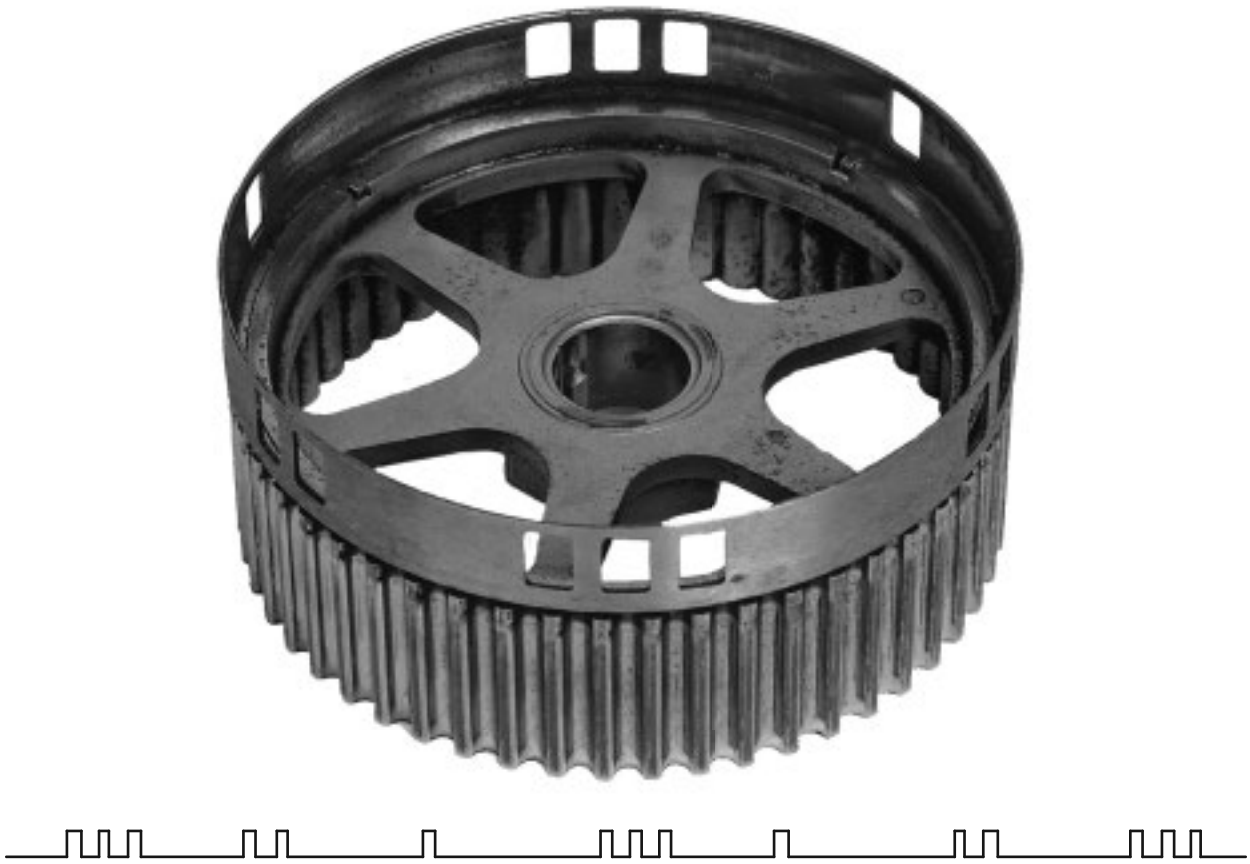

Figure 26 Typical Six-cylinder CMP Trigger Wheel

CMP sensor triggers are notched or have teeth, but not as many as the CKP trigger. Only one switch of signal high-to-low at TDC compression stroke is required to operate the engine normally. The multiple notches in the CMP trigger will allow the engine to continue running if the crankshaft position signal becomes unavailable to the PCM.

Notice in the figure above how the windows in the cam gear line up with the top signal (CMP) pattern and how the three windows line up with the bottom (CKP) signal pattern. The center window on the CKP pattern and the low gap on the CKP pattern also align. This alignment makes it possible for the PCM to continue to operate the engine if either signal is missing.

CMP Magnetic Trigger Wheels

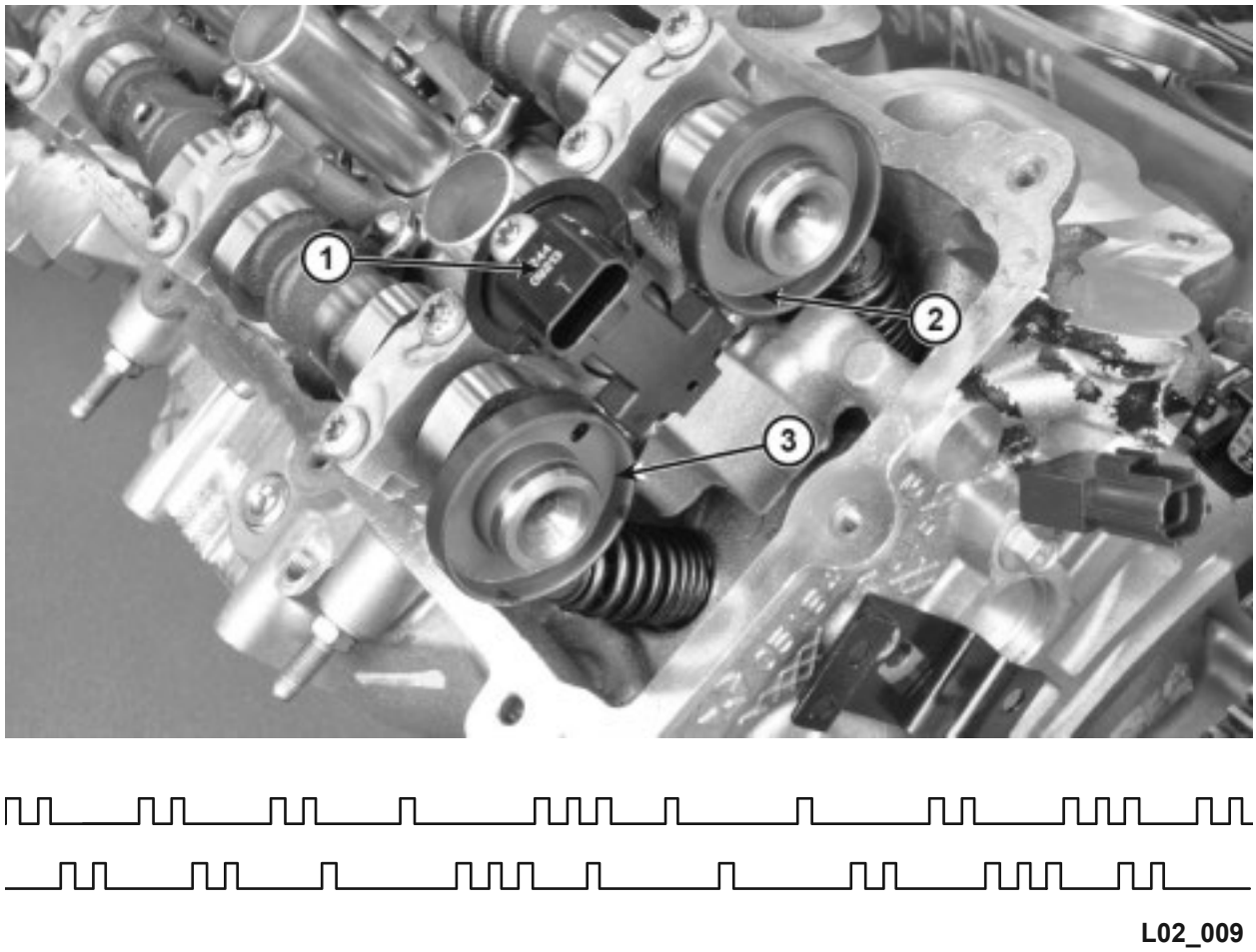

1	Dual Camshaft Position Sensor	3	Exhaust Camshaft Magnetic Trigger
2	Intake Camshaft Magnetic Trigger		

Figure 27 3.6 liter Cam Sensors and Magnetic Trigger Wheels

There is both an intake and an exhaust camshaft sensor on dual overhead camshaft (DOHC) vehicles. The variable valve timing (VVT) system used on most DOHC engines requires the exact position of both the intake and exhaust camshaft.

The 3.6 liter engine uses a dual sensor, which has two sensors in one component. The trigger wheels use impregnated magnets and they must not be damaged. If there is an issue with the magnet wheel, you must replace the entire camshaft. The PCM uses crankshaft sensor data along with camshaft sensor data to determine the actual position of the camshafts.

CAUTION: 3.6 liter camshaft magnetic triggers are sensitive to being damaged through physical impact and to being demagnetized. Avoid dropping camshafts on workbenches and avoid placing magnets near magnetic triggers.

World Engine CMP Trigger Wheel

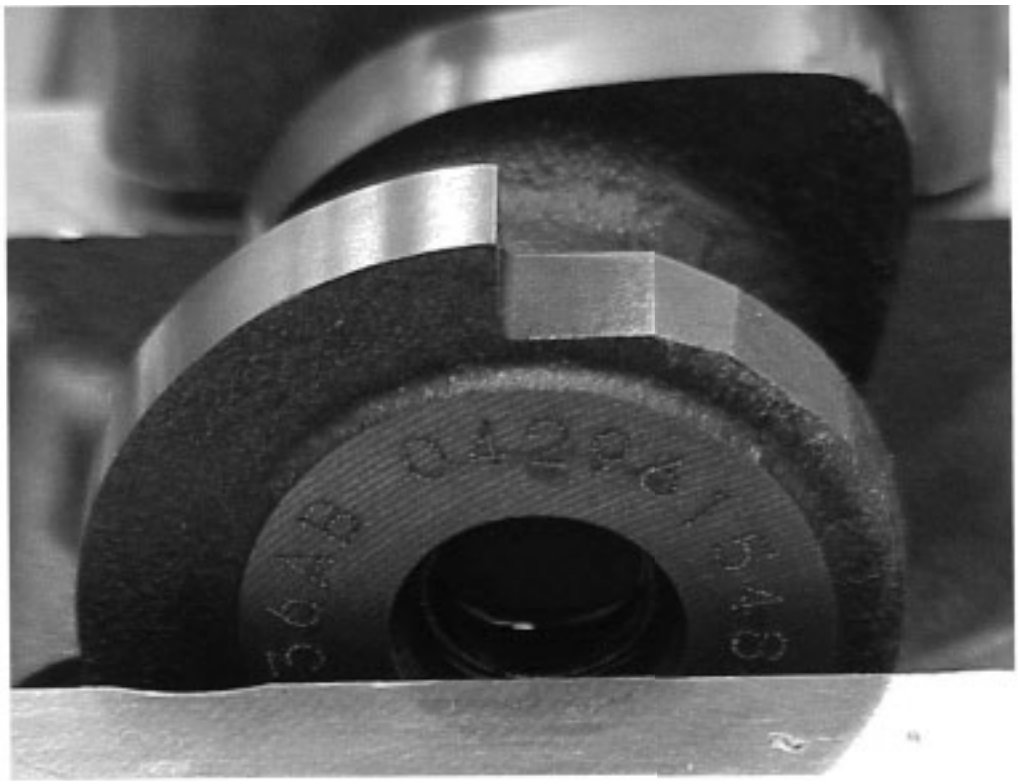

L02_010

Figure 28 World Engine CMP Trigger Wheel

Crankshaft Position (CKP) and Camshaft Position (CMP) Sensor Diagnostics

Typically, the engine will start even if one of these two sensor signals is missing. The PCM will eventually sort out engine position and start the vehicle on just one of these two inputs. However, there may be a slight delay in starting until the PCM can establish synchronization.

A DTC is set and the MIL will illuminate if either or both of the CKP and CMP signals are not present during engine cranking. However, intermittent loss of either sensor (especially the crank sensor) will typically cause a driveability symptom such as stalling or stumbling without setting a DTC. Further diagnosis requires either one or all of the following diagnostic tests: sensor graphing on wiTECH™ 2.0, cam/crank synchronization monitor, data recording, and oscilloscope diagnosis.

CKP and CMP Synchronization

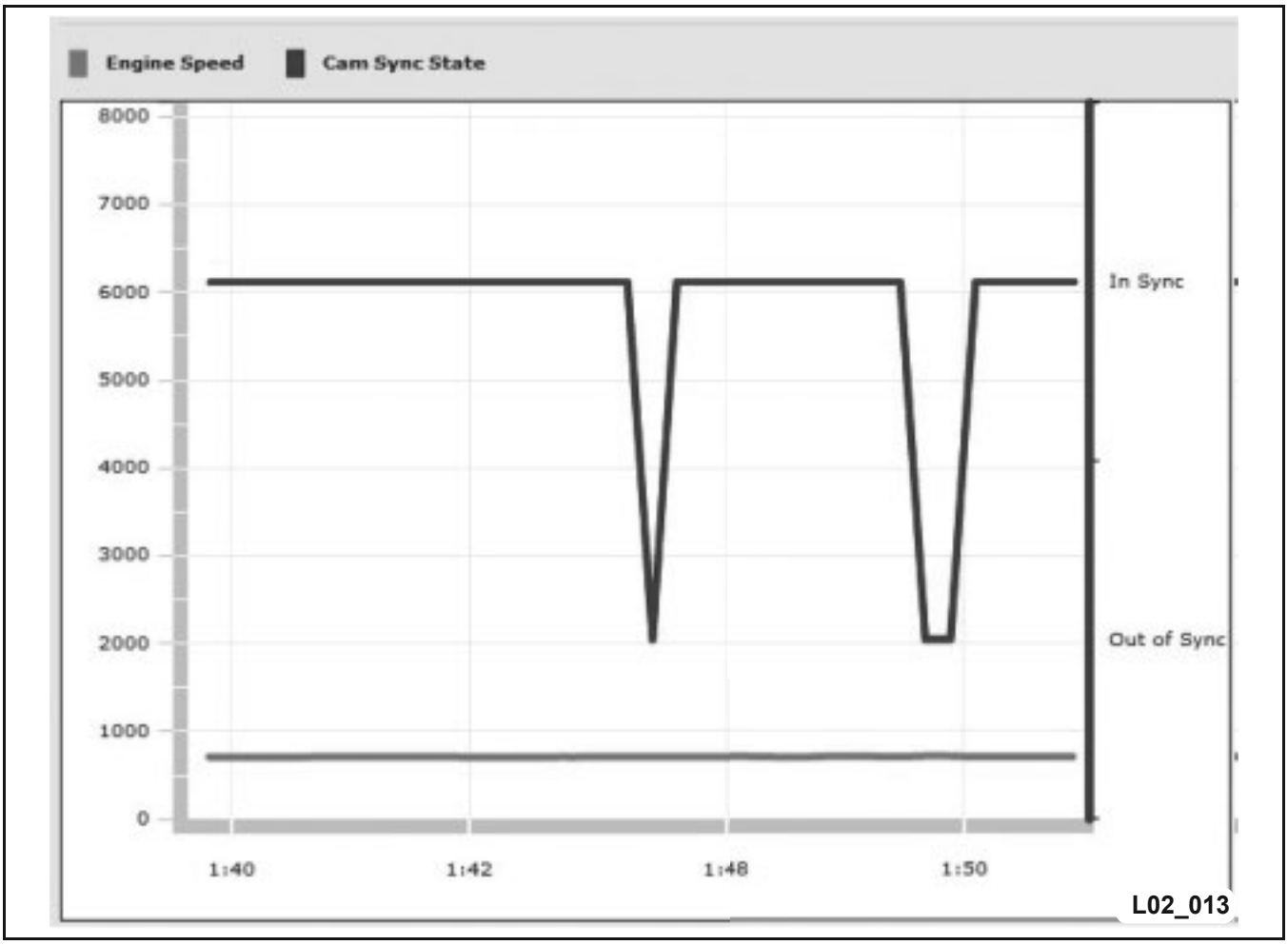

Figure 29 Intermittent Cam Signal Failure

There are data values on the scan tool called CKP Sync and CMP Sync. These can be used to monitor the cam and crank signal performance. If there is a concern with either one of the signals, it can be seen by monitoring the synchronization status. If either sensor is dropping out, it will be seen as a low spike in graph view as displayed in the figure above. The graph mode provides a much faster refresh rate to detect intermittent faults than viewing the normal data display mode.

Cam Crank Synchronization Event Monitor Data

Whenever there are concerns regarding cam or especially crank signal disturbances, further testing and diagnosis will be necessary. There are certain data parameters found under the OBDII Monitors called Cam Crank Synchronization Event Monitor data.

Some of the data names you may want to monitor for a intermittent condition that is not setting a DTC includes:

- Sync Event Mark Index
- Cam Sync Status
- Unlock Engine Position
- Unlock RPM
- Unlock Crank Status

Values to take note of in the different Mark Event and Timing lines include

- Out of Sync
- Cam Unlock
- Crank Unlock
- Crank Stalled
- True or False

This information can be used with the aid of a STAR Center agent to further diagnose a customer concern.

Cam/Crank Variation Relearn or Target Linear Correlation

The cam/crank variation relearn procedure must be performed using the scan tool any time there has been a repair or replacement made to a cam- or crank-sensor related component.

Examples of component replacements that require relearn include: flywheel, valvetrain, camshaft sensors, and crankshaft sensors. Any time a physical relationship between the sensors is changed, this must be performed. Any time an engine is replaced, this procedure must be performed.

Notes:

Notes:

ACTIVITY 2 DIAGNOSE SENSOR INPUTS

TASK ONE: CRANKSHAFT/CAMSHAFT POSITION SENSOR DIAGNOSIS

Provide answers to the following questions as you complete the activity.

1. Using service information, identify the wires at the crankshaft (CKP) sensor harness connector by color and circuit function. Fill in the table below.

PCM Connector/Pin	CKP Connector/Pin	Circuit #/Wire Color	Circuit Function
			Sensor Supply Voltage
			Sensor Ground
			Crankshaft Position Sensor Signal

2. With the ignition ON and the connector unplugged, measure the voltage at each of the harness connector pins. Fill in the table below with your results.

CKP Connector/Pin	Voltage
1	
2	
3	

With the connector disconnected, crank the engine for 5 seconds.

3. What DTCs are now present?

_____

Reconnect the CKP connector and erase the DTCs.

4. Using service information, identify the wires at the camshaft (CMP) sensor harness connector by color and circuit function. Fill in the table below.

NOTE: Answer Cam Position Sensor Signal 2 only if applicable.

PCM Connector/Pin	CMP Connector/Pin	Circuit #/Wire Color	Circuit Function
			Sensor Supply Voltage
			Sensor Ground
			Camshaft Position Sensor Signal 1
			Camshaft Position Sensor Signal 2

5. With the ignition ON and the camshaft position sensor connector unplugged, measure the voltage at each of the harness connector pins. Fill in the table below.

CMP Connector/Pin	Voltage measured
1	
2	
3	
4	

With the connector disconnected or the signal wire shorted to ground, crank the engine for 5 seconds.

6. Did the engine start?

_____

7. Were there any other symptoms?

_____

Reconnect the CMP connector and erase the DTCs.

Notes:

Notes:

LESSON 2 PCM INPUTS (CONTINUED)

MANIFOLD ABSOLUTE PRESSURE (MAP) SENSOR

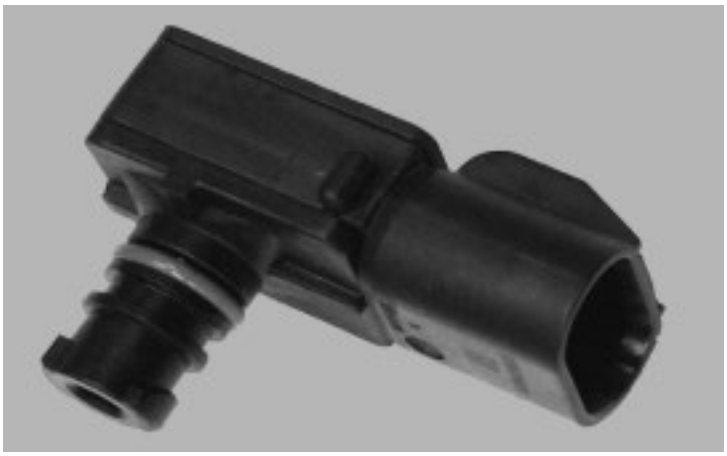

L02_014

Figure 30 Typical MAP Sensor

MAP Sensor

The MAP sensor measures the level of pressure or vacuum existing in the intake manifold. The MAP sensor also determines ambient barometric pressure. The PCM needs this information because air density changes with altitude. The MAP sensor also helps to correct for varying weather conditions. This sensor is relied upon heavily in determining engine operating parameters especially under load.

The MAP sensor signal circuit receives 5V from the PCM and varies the voltage signal to the PCM in proportion to manifold pressure (vacuum). The 5V power supply to the MAP sensor may be shared with other sensors. The MAP sensor operating range is approximately 0.45V (high vacuum) to 4.8V (low vacuum). Like the cam and crank sensors, ground is provided through the sensor ground circuit.

The MAP sensor has the most authority of any sensor for determining injector pulse-width while the engine is running. The MAP sensor also influences spark advance, ETC throttle plate position, and deceleration fuel shutoff.

There is always a slight lag in response from the MAP sensor itself. Therefore, the PCM calculates the expected MAP value based on inputs for throttle position, barometric pressure, and idle air control (IAC) position, if equipped. This is part of the model-based fuel strategy and this calculated value is called T-MAP. The MAP sensor input validates this calculated value.

MAP Sensor Circuit

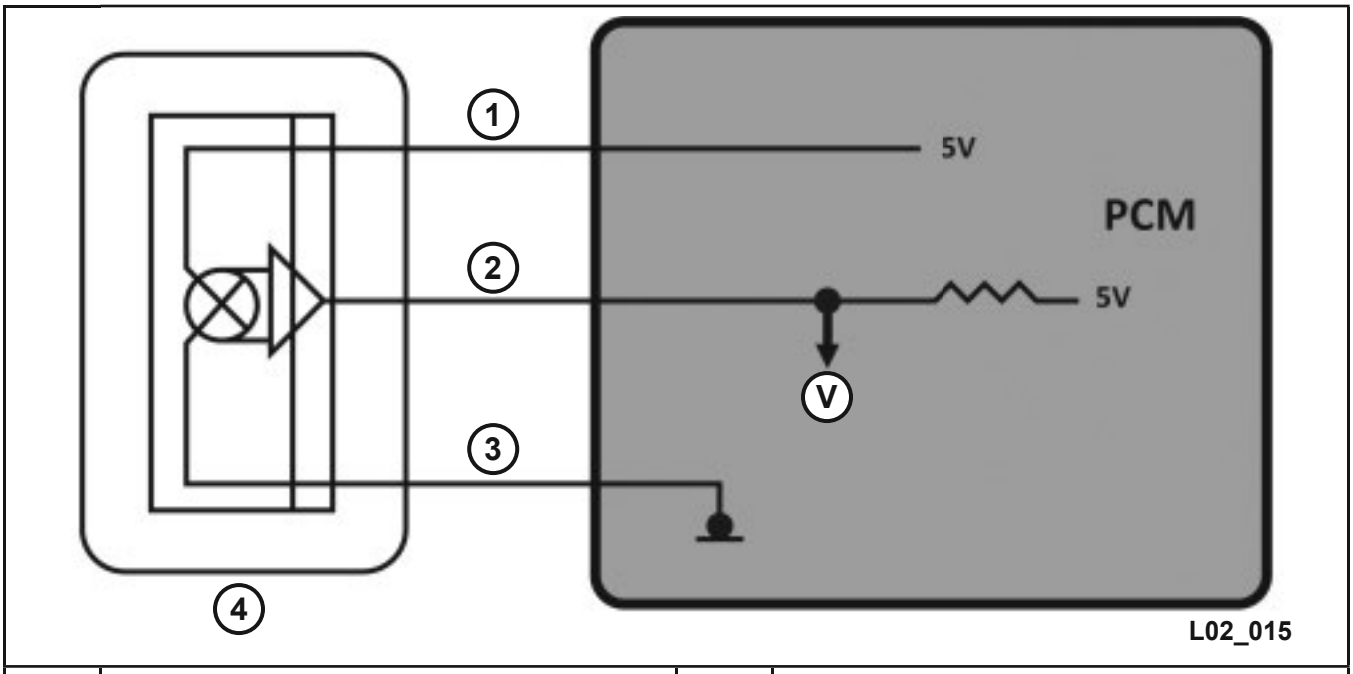

1	5V Reference Circuit	3	Ground Circuit
2	Signal Circuit	4	MAP Sensor

Figure 31 MAP Sensor Circuit

Table 5 Typical MAP Sensor Signal vs. Pressure

MAP Sensor Voltage	Barometer Reading	Altitude
4.43V	29.92 in. Hg	Sea Level
4.36V	29.42 in. Hg	500 ft.
4.29V	28.92 in. Hg	1000 ft.
4.22V	28.42 in. Hg	1500 ft.
4.15V	27.92 in. Hg	2000 ft.
4.08V	27.42 in. Hg	2500 ft.
4.01V	26.92 in. Hg	3000 ft.
3.94V	26.42 in. Hg	3500 ft.
3.87V	25.92 in. Hg	4000 ft.
3.80V	25.42 in. Hg	4500 ft.
3.73V	24.92 in. Hg	5000 ft.

MAP Sensors on Turbocharged Vehicles

Turbocharged vehicles have MAP sensors that are calibrated to measure positive as well as negative pressure in the intake manifold. These vehicles have a second sensor called the throttle inlet pressure/barometric (TIP/BARO) sensor.

This sensor is just like a MAP sensor and measures two different conditions: barometric (atmospheric) pressure and inlet boost pressure. Inlet boost pressure is sensed after the charge-air cooler and before the throttlebody. The throttle inlet pressure/barometric solenoid is switched by the PCM to allow the TIP/BARO sensor to sense throttle inlet pressure 95% of the time, and barometric pressure 5% of the time.

Table 6 Typical Throttle Inlet Pressure Sensor Signal vs. Pressure

MAP Sensor Voltage	Barometer Reading	Manifold Vacuum/Pressure
4.46V	60.46 in. Hg	15 lbs. (boost)
4.01V	54.35 in. Hg	12 lbs. (boost)
3.56V	48.24 in. Hg	9 lbs. (boost)
3.11V	42.14 in. Hg	6 lbs. (boost)
2.66V	36.03 in. Hg	3 lbs. (boost)
2.21V	29.92 in. Hg (sea level)	0 lbs. (boost)
2.11V	28.7 in. Hg	1.2 in. Hg
2.02V	27.42 in. Hg	2.5 in. Hg
1.91V	25.92 in. Hg	4.0 in. Hg
1.76V	23.92 in. Hg	6.0 in. Hg
1.62V	21.9 in. Hg	8.0 in. Hg
1.40V	18.9 in. Hg	11.0 in. Hg
1.25V	16.9 in. Hg	13.0 in. Hg
1.03V	13.9 in. Hg	16.0 in. Hg
0.88V	11.9 in. Hg	18.0 in. Hg

Voltage values will vary with changes in altitude and atmospheric pressure.

Throttle Position Sensor

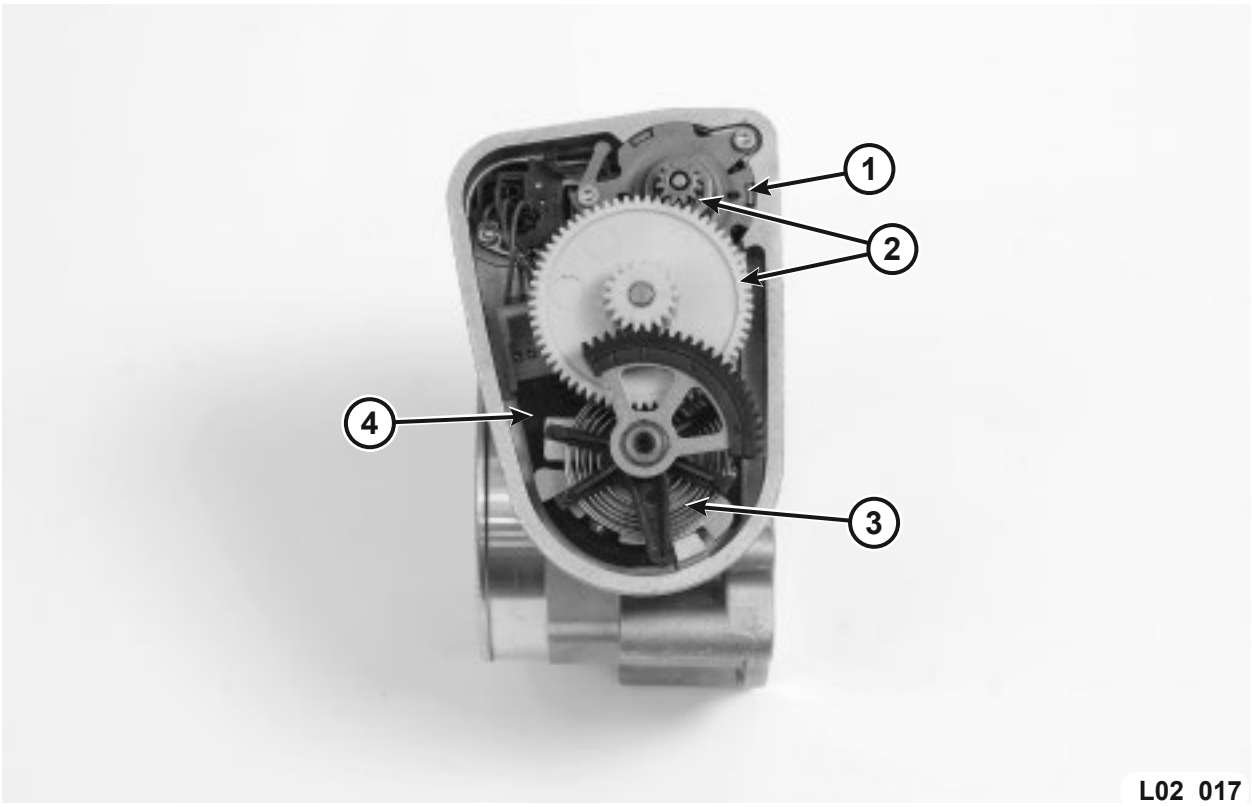

1	Throttle Actuator Motor	3	Spring
2	Gears	4	Throttle Position Sensors (2)

Figure 32 ETC Throttlebody Assembly

Two throttle position sensors (TPS) are built into the electronic throttle control (ETC) throttlebody and provide two throttle position signals to the PCM. Two sensors are used for fail-safe redundancy and error checking. The sensors output analog signals to inform the PCM that the throttle plate moves as expected.

Two three-wire potentiometer sensors are used. The sensors use 5V supply and sensor grounds, which may be common with other sensors.

Electronic Throttle Control Circuit

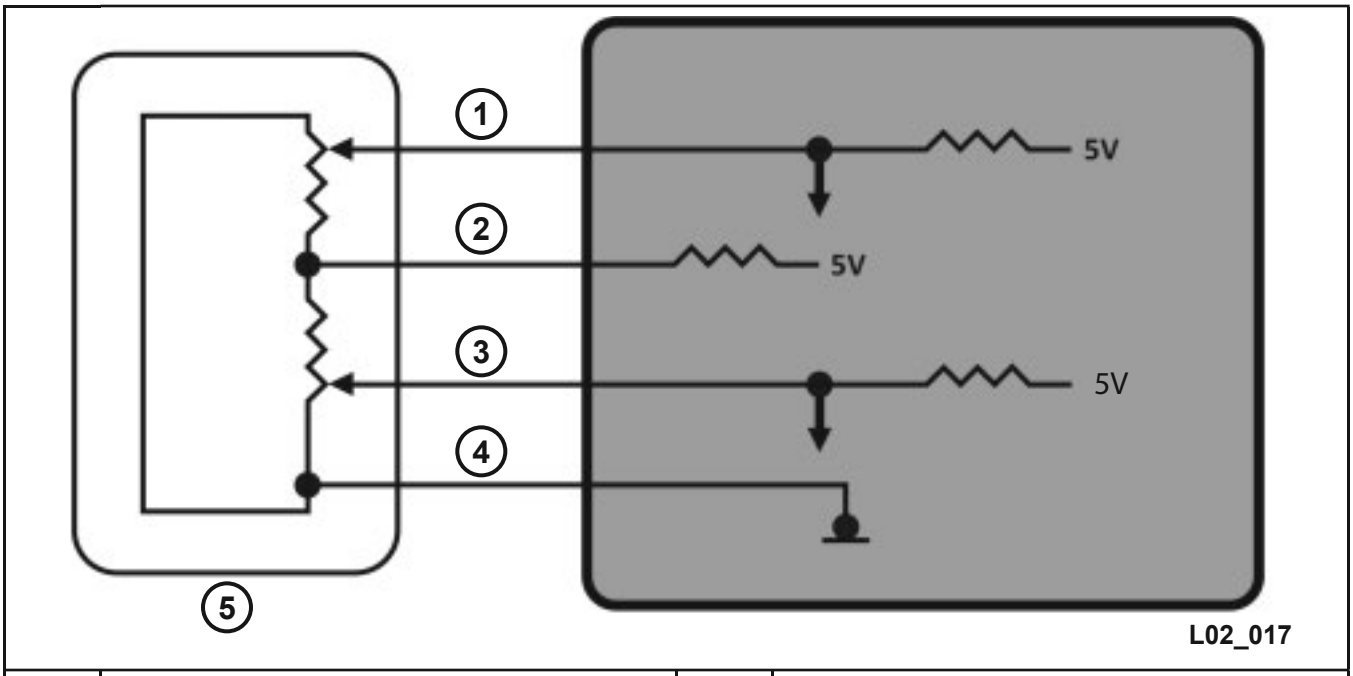

1	TPS 1 Signal Circuit	4	Ground Circuit
2	5V Reference Circuit	5	ETC Throttlebody
3	TPS 2 Signal Circuit		

Figure 33 Electronic Throttle Control Circuit

Each sensor outputs an analog signal in proportion to throttle plate position, but one sensor uses reverse logic. As the throttle plate opens, the signal voltage from TPS 1 increases while the signal voltage from TPS 2 decreases. The sum of the two TPS signal voltages will always equal approximately 5V. The PCM monitors this value to check system integrity.

TPS Voltage vs. Position

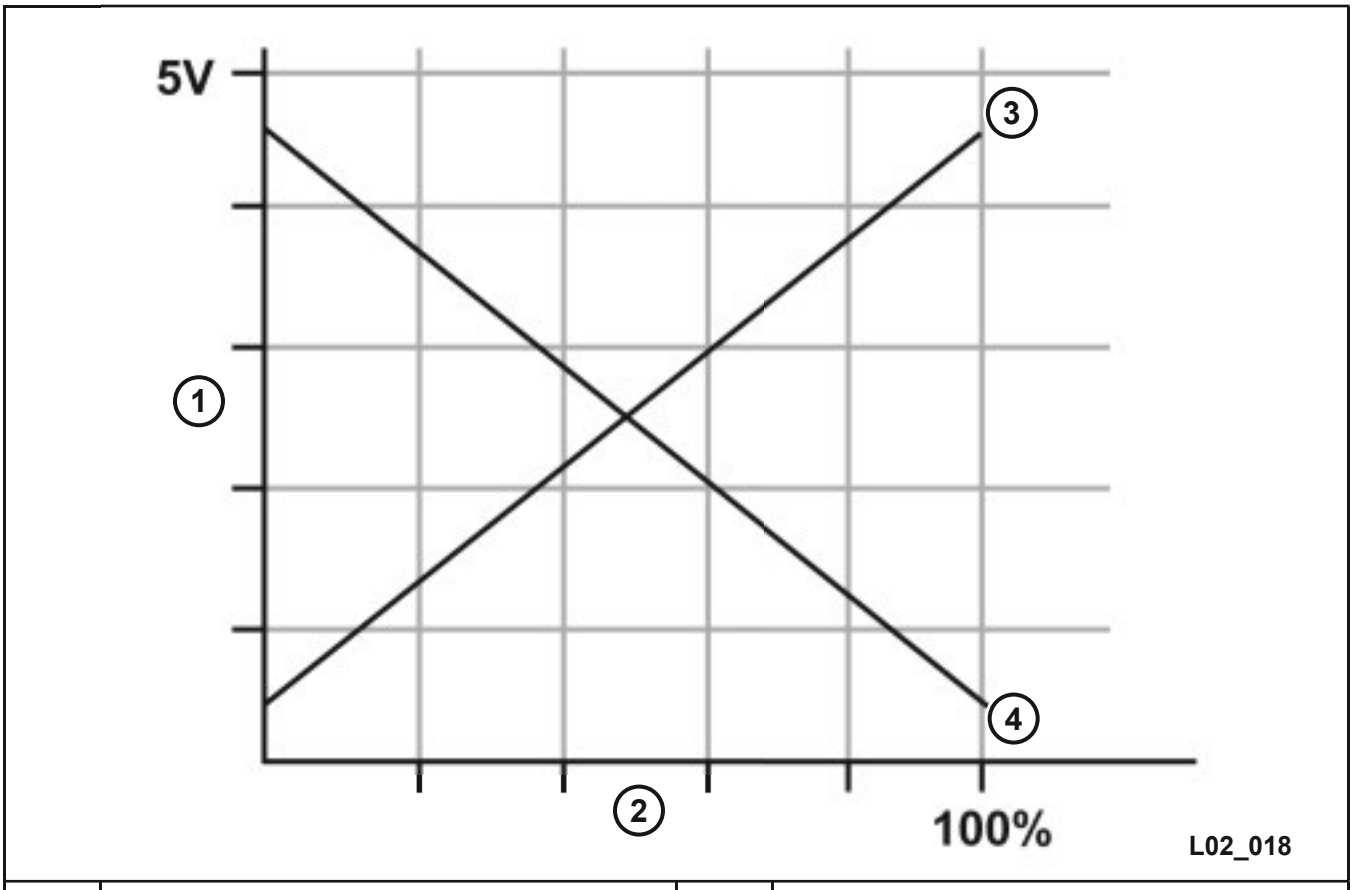

1	TPS Signal Voltage	3	TPS 1 Voltage
2	TPS 2 Voltage	4	Throttle Opening Percentage

Figure 34 TPS Signal Voltages vs. Throttle Plate Position

TPS1 + TPS2 = 5V		
1.1	3.9	5V
2.4	2.6	5V
3.6	1.4	5V
4.3	0.7	5V

Table 7 Typical Signal Voltages

The ETC throttlebody uses a six-pin connector, four of the pins are for the two TPS sensors, and the other two pins are for the throttle plate actuator motor.

TPS Signals

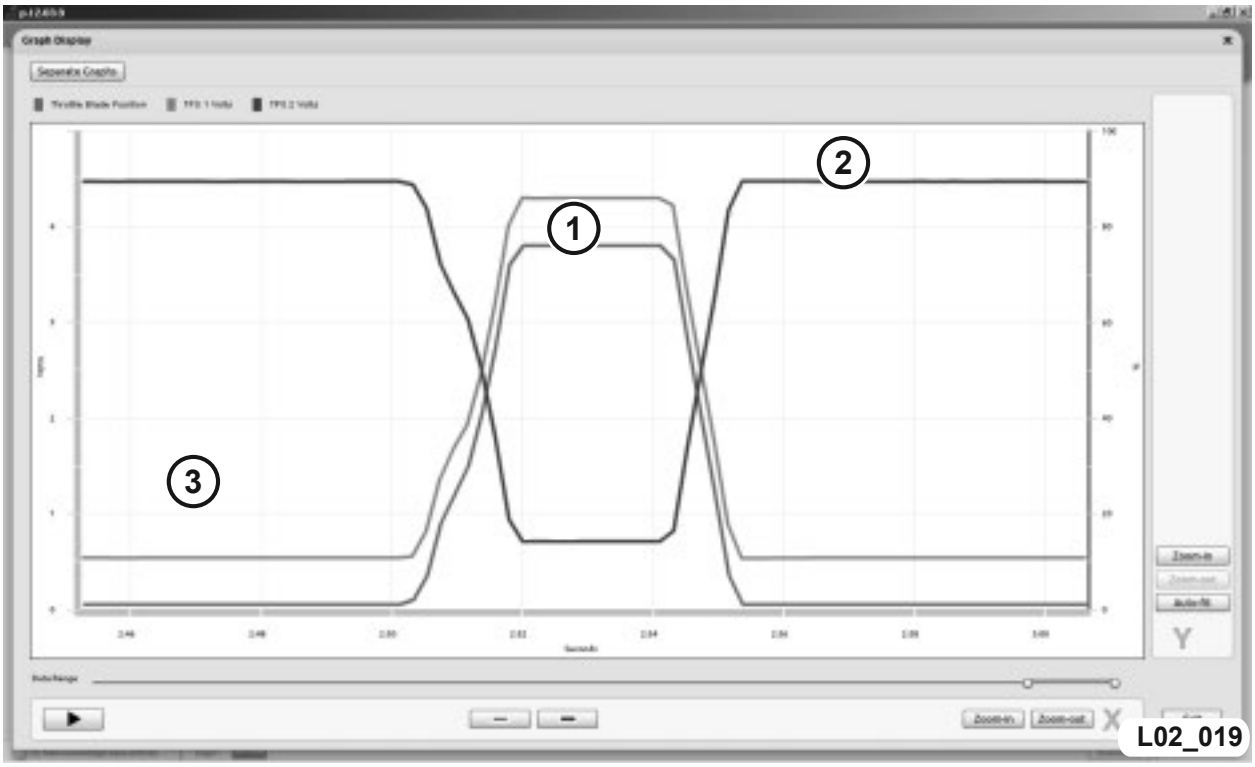

1	Throttle Blade Position	3	TPS 1 Volts
2	TPS 2 Volts		

Figure 35 TPS Signals Graphed

ETC TPS Diagnostics

Failure of one TPS will initiate the fail-safe mode. Loss of both TPS signals will cause the system to enter the limp-in mode. Either one will cause the ETC failure light to illuminate and the ETC will stop functioning.

When in fail-safe mode, the PCM will respond to the accelerator pedal input by advancing the ignition timing and adding more fuel to allow for limited rpm increase. The throttle plate is spring-loaded to remain open a small amount to support this strategy. When the accelerator pedal is not depressed, the idle may seem very rough. The PCM retards ignition timing and reduces fuel input, which reduces engine speed.

If the system enters limp-in mode, the same strategy applies except the accelerator pedal input may not be functioning or is not being used. Pushing on the accelerator pedal will have no effect on the engine rpm. The only input that will make a difference is the brake switch. By stepping on the brake pedal, the PCM will attempt to reduce engine speed by retarding the ignition timing and reducing the fuel input in the same manner as fail-safe mode.

The throttlebody has no serviceable components and is replaced as a unit. Disconnect the battery before replacing the throttlebody. After replacement, the new throttlebody must be relearned. A typical relearn procedure is shown below. Always refer to the latest service information for specific procedures.

- Disconnect the battery negative cable for at least 90 seconds.
- Reconnect the negative cable.
- Turn the ignition to the ON position (do not crank).
- Leave the ignition ON for at least 10 seconds; the wiTECH™ 2.0 will adapt the throttlebody.

This procedure needs to be performed whenever the battery has been disconnected. The PCM will move the throttle plate through its full travel.

Accelerator Pedal Position (APP) Sensors

1	APP Sensor Assembly

Figure 36 Accelerator Pedal Position Sensors with Accelerator Pedal

Two accelerator pedal position (APP) sensors input the driver's accelerator pedal request signal to the PCM.

The two sensors are in one housing and located on the accelerator pedal assembly.

The sensors are two three-wire, linear, Hall-effect sensors that provide the PCM with two voltage signals in proportion to the accelerator pedal position. Redundant sensors are used because of their critical function.

APP Sensor Circuits

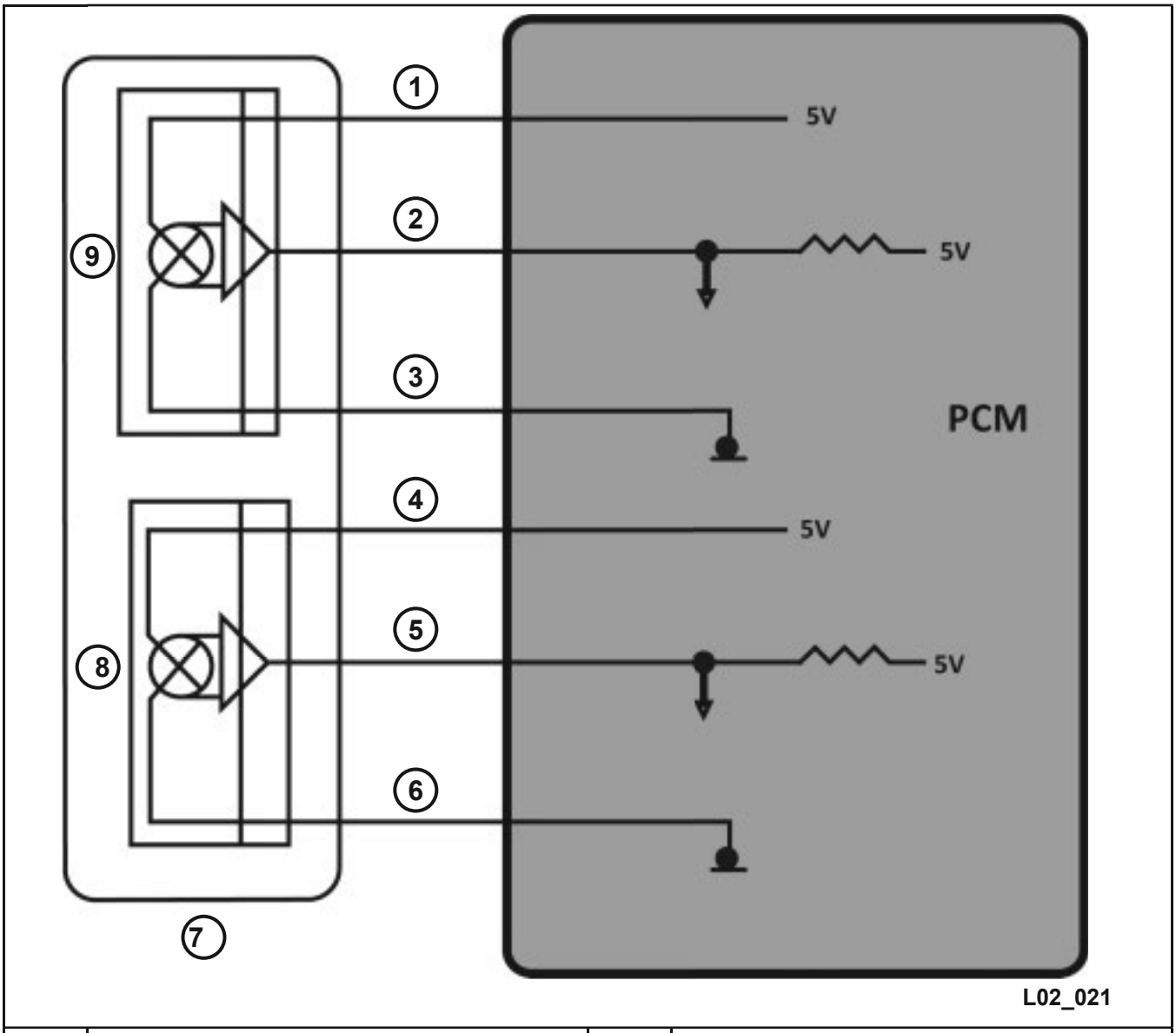

1	APP 1 5V Reference Circuit	6	APP 2 Ground Circuit
2	APP 1 Signal Circuit	7	Accelerator Pedal Assembly
3	APP 1 Ground Circuit	8	APP 2 Sensor
4	APP 2 5V Reference Circuit	9	APP 1 Sensor
5	APP 2 Signal Circuit		

Figure 37 APP Sensor Circuits

APP Signal vs. Pedal Travel

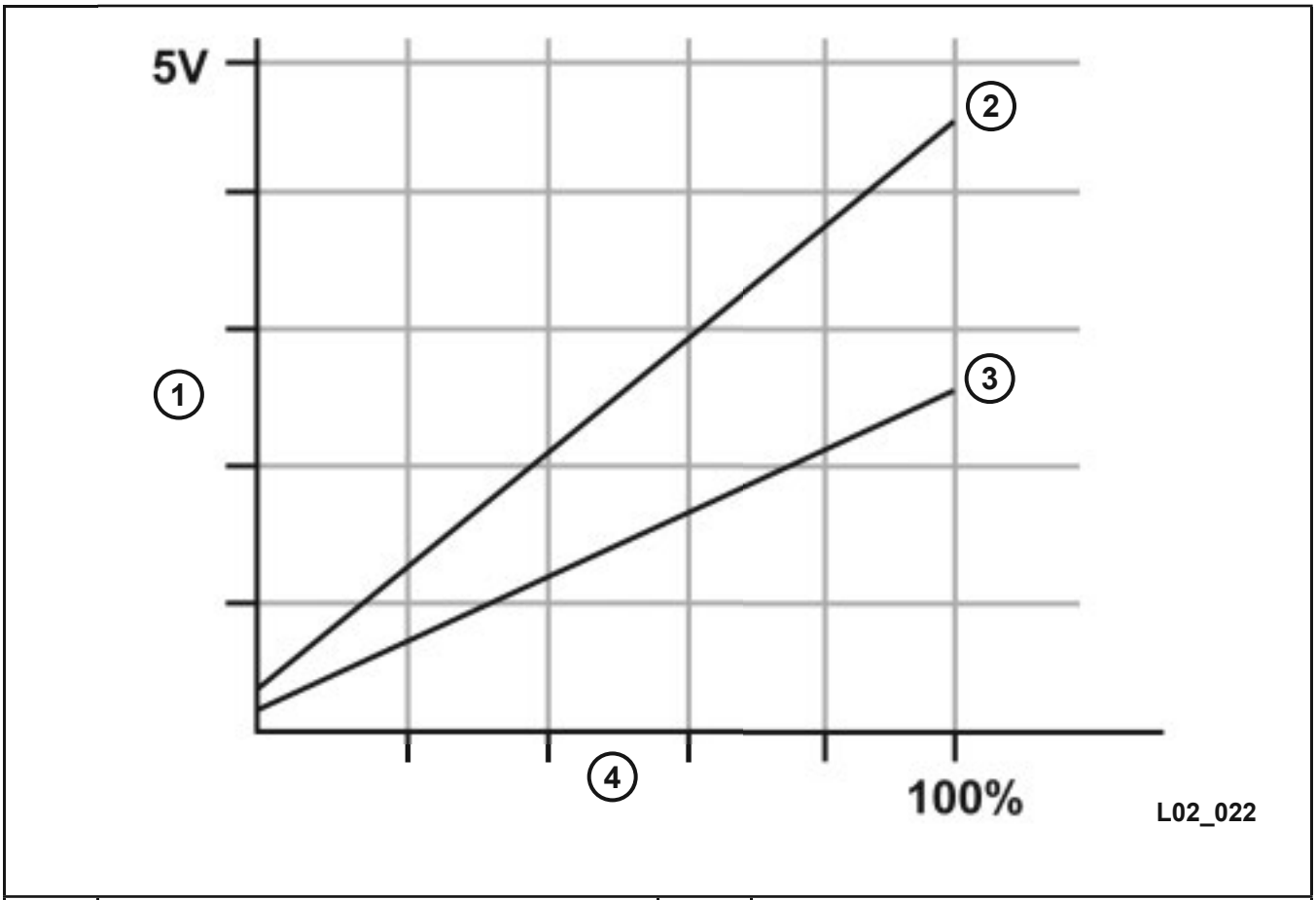

1	Signal Voltage	3	APP 2 Voltage
2	APP 1 Voltage	4	Accelerator Pedal Travel

Figure 38 APP Sensor Signal Voltages vs. Accelerator Pedal Travel

On all powertrains except for 1.4 liter, the signals from the two sensors are not identical. As the throttle opens, the signal from one sensor increases at about twice the rate of the signal from the other sensor. The two sensors have completely separate circuits, with separate 5V references, signals, and grounds. On 1.4 liter applications the APP sensor is a redundant sensor using the same voltage scale.

APP Signal Self Test

L02_023

1	APP 2 Normal Sensor Signal

Figure 39 APP 2 Typical Sensor Signal with Self Test

NOTE: The APP 2 signal will drop low at spaced intervals when viewed in graph mode with the scan tool. This is a normal self test and should not be considered a faulty signal.

APP Sensor Diagnostics

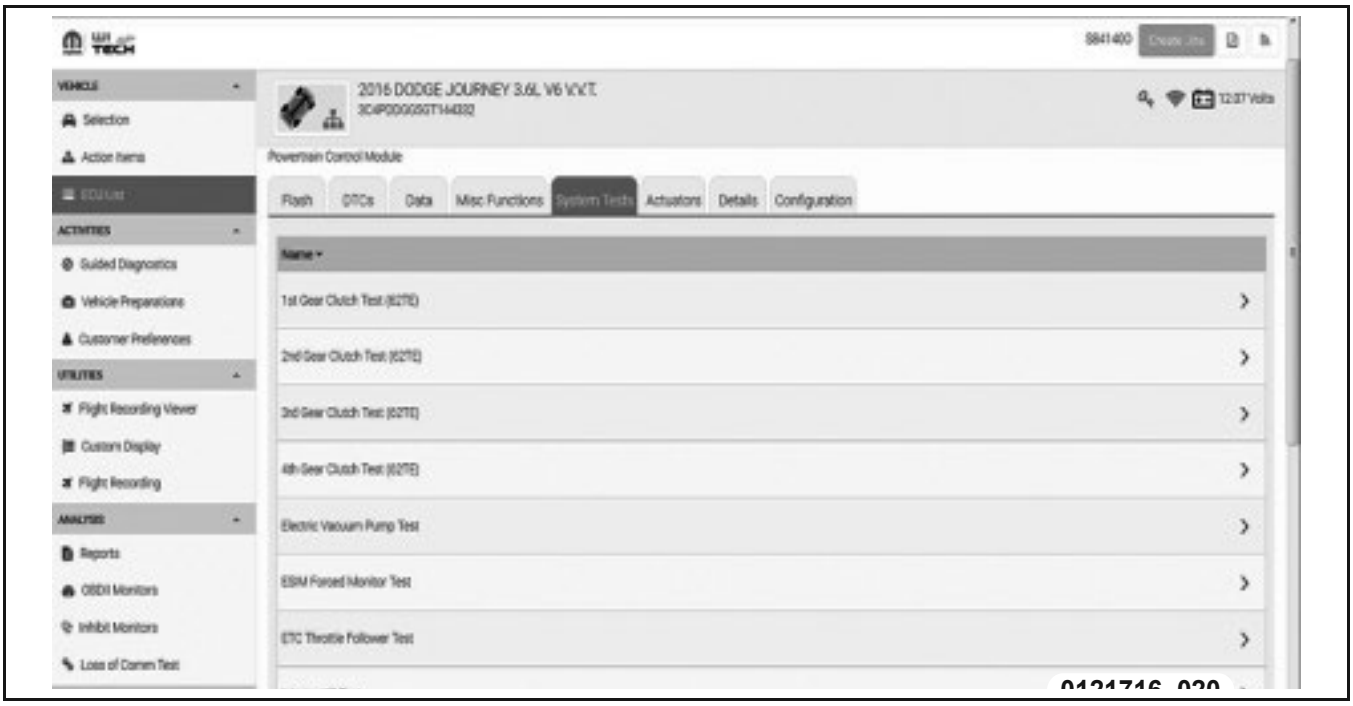

Figure 40 ETC Throttle Follower Test

Guidelines to assist in APP sensor diagnosis include:

- Loss of one APP signal will initiate the fail-safe mode.
- Loss of both APP signals will cause the system to enter the limp-in mode.
- DTCs will also set according to vehicle-specific applications.
- The ETC Learn mode must be performed if the APP sensor is replaced.
- The ETC Throttle Follower Test can be used to verify proper operation.

EGR Position Sensor

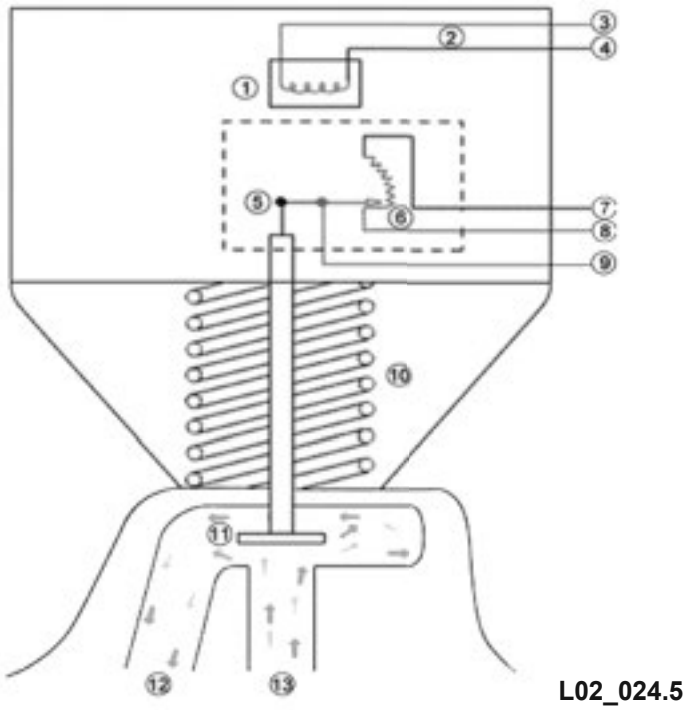

1	Solenoid	8	5-volt Supply
2	Solenoid Circuits	9	Sense Circuit
3	PCM Control Power	10	Spring
4	PCM Control Ground	11	Valve
5	Pintle	12	To Intake Manifold
6	Potentiometer Circuits	13	From Exhaust Manifold
7	Ground		

Figure 41 Linear EGR Valve Components

The EGR position sensor is a three-wire, linear potentiometer providing feedback to the PCM for EGR valve position. This allows for more precise control over EGR flow for better NOx control.

The EGR position sensor shares the same 5V supply circuit as other three-wire sensors. The EGR position sensor works similar to the TPS. When the valve is closed, the sensor voltage is high; and when the valve is open, the sensor voltage is low.

EGR Position Sensor Diagnostics

Guidelines to assist in EGR diagnosis include:

- The EGR Rationality Fault is set when flow or valve movement is not what is expected.
- The EGR Position Sensor Too Low is set when the signal is less than a specified value.
- The EGR Position Sensor Too High is set when the signal is greater than a specified value. Fuel Tank Pressure Sensor

Fuel Tank Pressure Sensor

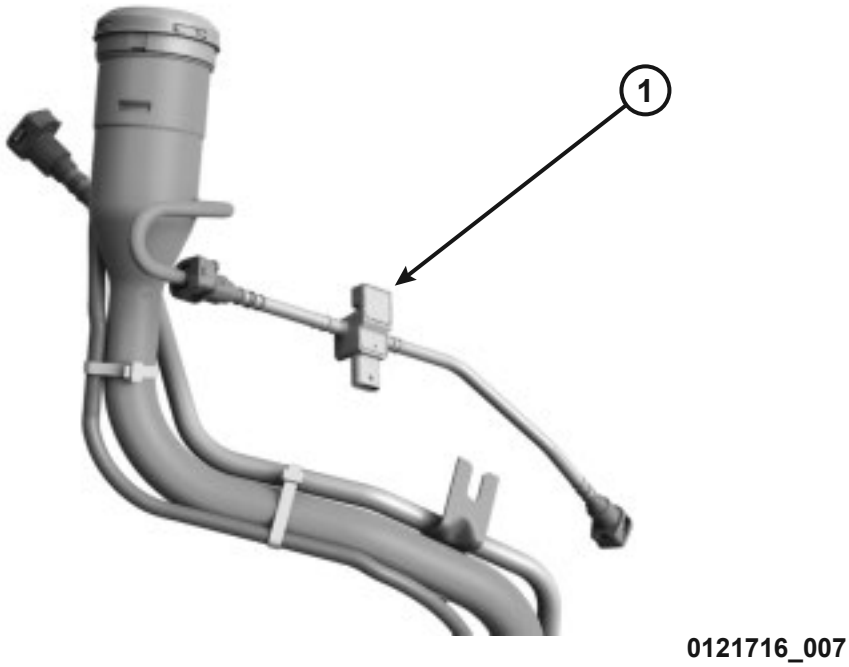

1	Fuel Tank Pressure Sensor

Figure 42 Fuel Tank Pressure Sensor Location

The fuel tank pressure sensor (FTPS) is located between the fuel tank and fuel filler neck. The FTPS measures the fuel tank pressure or vacuum level to determine component controls for proper refueling and evaporative system venting. The sensor is a diaphragm-type pressure sensor which uses a varying 0 to 5-volt voltage output in relation to fuel tank pressure. As fuel tank pressure increases, the feedback voltage decreases. The PCM monitors tank pressure, preventing pressure from increasing or decreasing excessively. Pressure changes in the tank due to temperature changes while purge is disabled.

Insufficient or excessive fuel tank pressure could cause:

- Fuel vapors to vent out the fuel filler cap
- Excessive vacuum causing tank collapse
- Loss of fuel pressure
- Component damage

Fuel Tank Pressure Sensor Diagnostics

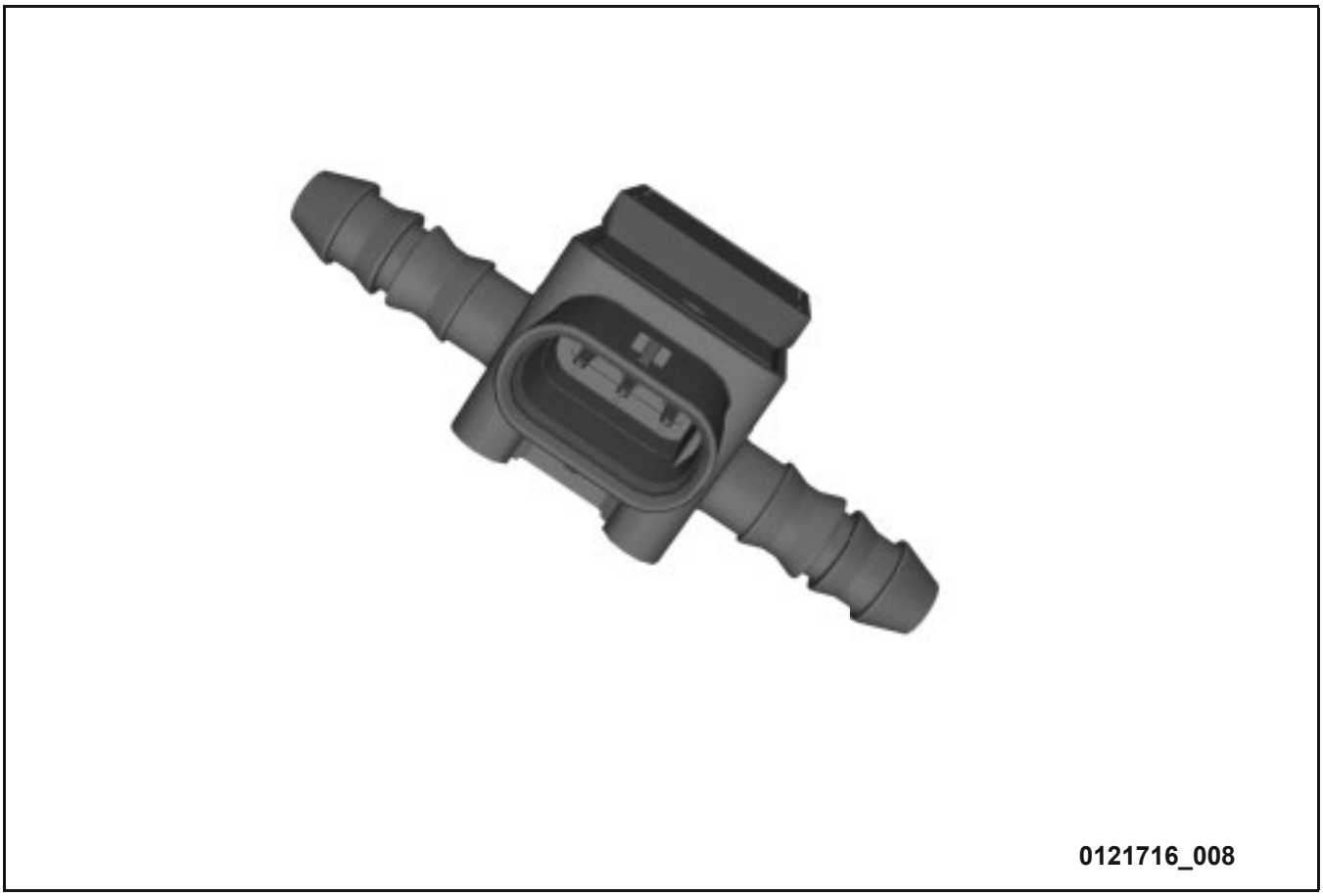

Figure 43 Fuel Tank Pressure Sensor

OBD1 diagnostics are performed on the input by the PCM. If a fault occurs, fuel tank pressure sensor is set to a calibrated default value. You will want to read the fuel tank pressure sensor readings on your scan tool in Pascals (Pa) unit of measurement. The amount of pressure changes in the evaporative fuel system are measured in inches of H20 by the control module. An unwanted 1" to 2" of H2O pressure change in this system can cause a DTC. 1" of H2O is equal to 248.8 Pascals (Pa). Please refer to service information for proper diagnostic procedures related to these DTCs

Fuel Rail Pressure Sensor

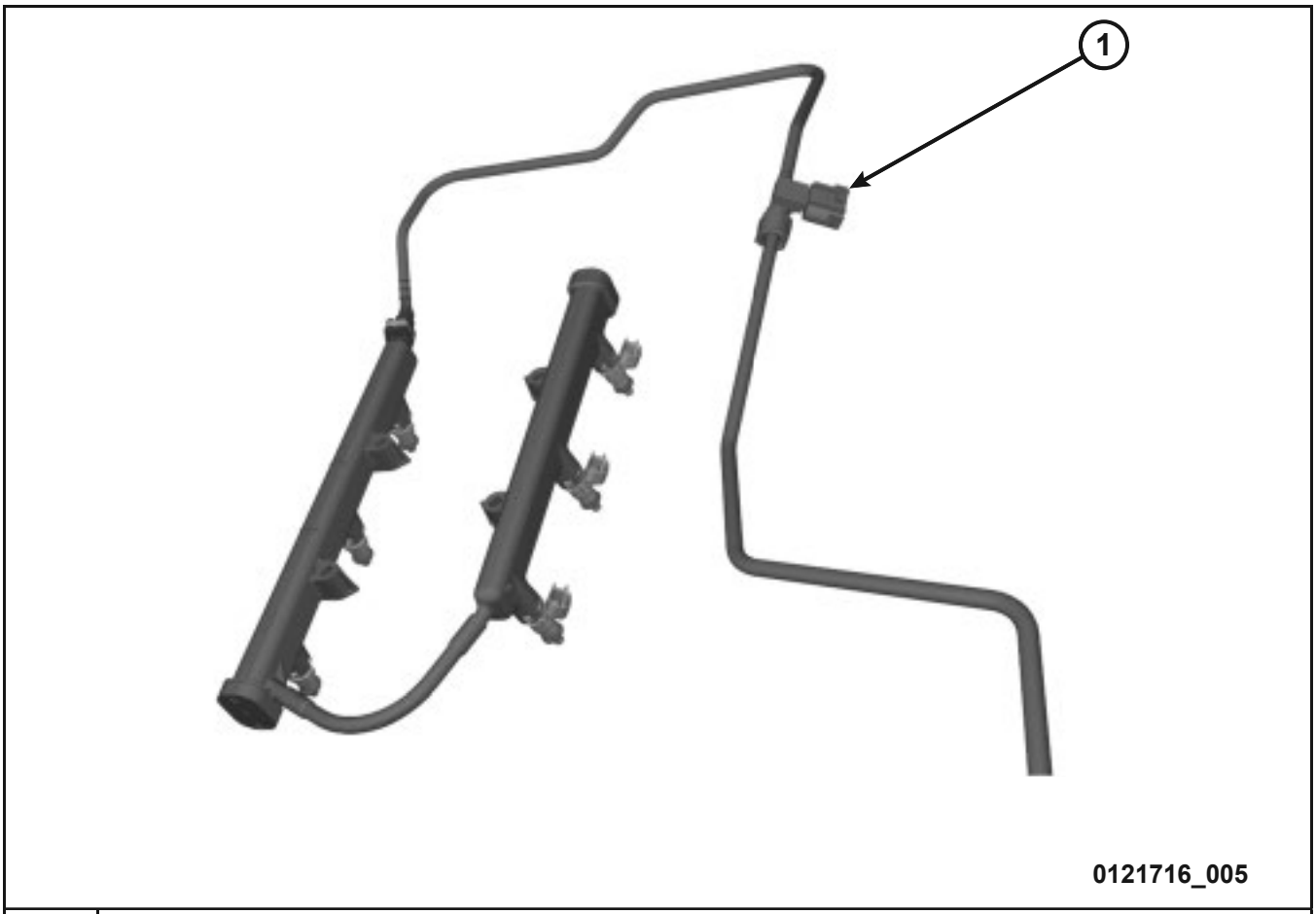

1	Fuel Rail Pressure Sensor

Figure 44 Fuel Rail Pressure Sensor Location

The PCM uses the fuel rail pressure sensor signal as an input to determine if the variable speed fuel pump is maintaining sufficient pressure to maintain proper fuel injection pressure demand. The PCM compares the actual fuel pressure reading to the desired set pressure. The PCM determines if any fuel pressure adjustments are required based on this comparison. As fuel rail pressure changes occur, the PCM will signal to the fuel pump control module (FPCM) to regulate the fuel pressure.

Fuel Rail Pressure Sensor Diagnostics

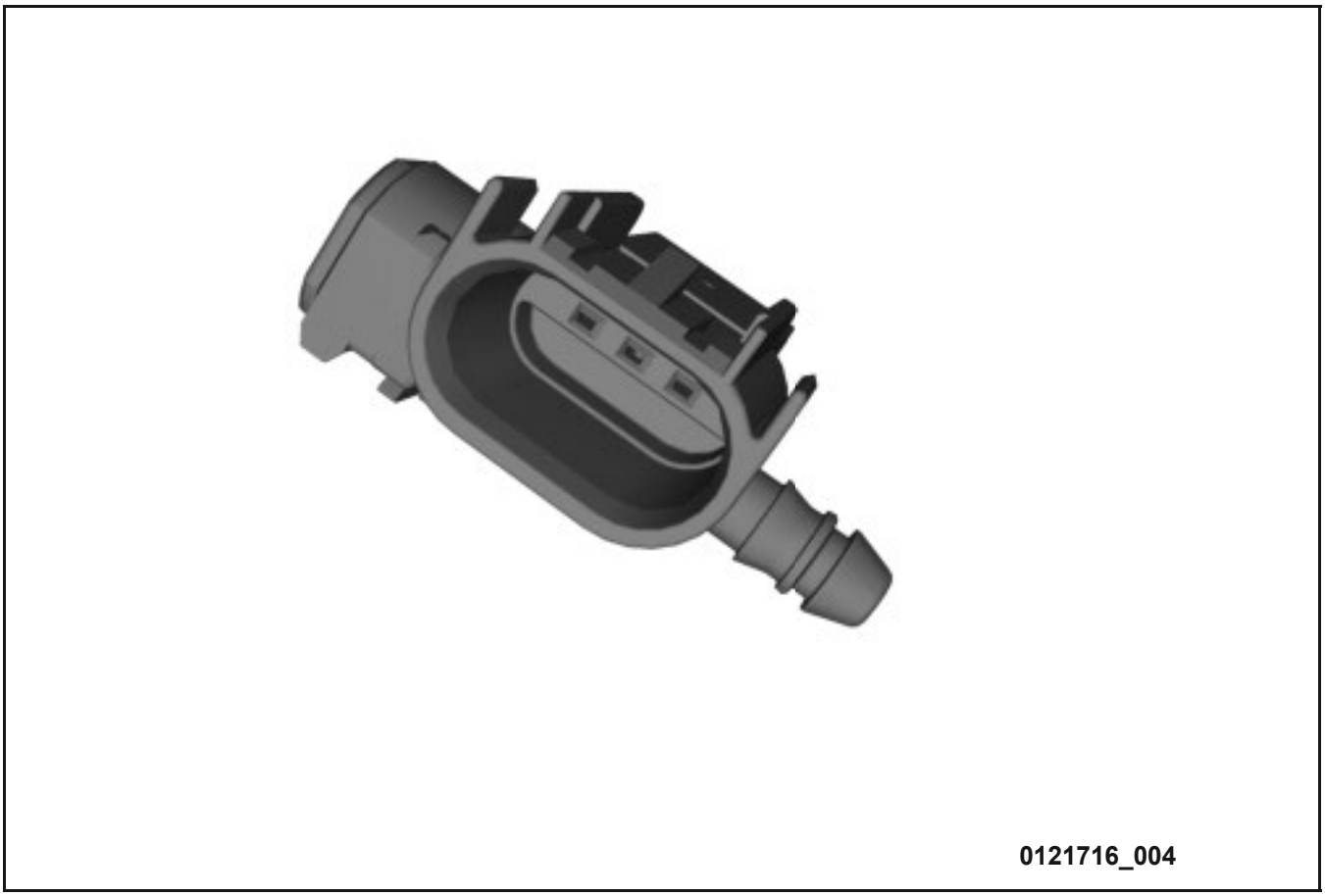

Figure 45 Fuel Rail Pressure Sensor

The Powertrain Control Module (PCM) provides a 5-Volt supply to the fuel rail pressure sensor (FRPS). The PCM also provides a ground through the sensor return circuit. The fuel rail pressure sensor provides a signal to the PCM on the fuel rail pressure sensor signal circuit. This sensor signal voltage changes based on the pressure in the fuel rail. The PCM is capable of detecting a low signal voltage, high signal voltage, as well as voltage out of range. The sensor is a standard pressure transducer that operates on a 0-5V scale. The normal operating band of the sensor is 0.5 – 4.5V where 0.5V = Pzero and 4.5V = Pmax. The band 0V – 0.5V is the area reserved for an open or shorted low sensor circuit fault. The upper band of 4.5V – 5.0V is reserved for sensor shorted high.

The PCM monitors the fuel pressure sensor signal for the following failures:

- Circuit performance
- Circuit voltage low
- Circuit voltage high
- Sensor rationality

Please refer to service information for proper diagnostic procedures related to these DTCs.

Notes:

ACTIVITY 2 DIAGNOSE SENSOR INPUTS (CONTINUED)

TASK TWO: MAP SENSOR DIAGNOSIS

Answer the following questions as you complete the activity.

1. Using service information, identify the wires at the MAP harness connector by color and circuit function. Fill in the table below.

PCM Connector/Pin	MAP Connector/Pin	Circuit #/Wire Color	Circuit Function
			Sensor Supply Voltage
			MAP Sensor Signal
			Sensor Ground

NOTE: Install the exhaust hoses prior to starting the engine.

2. Start the engine, connect the scan tool, and navigate to the Data tab. Record the normal MAP voltage, MAP vacuum, and BARO readings in the table below.

Scan Tool Data	Values
MAP Vacuum (in. Hg)	
MAP Volts	
BARO (in. Hg)	

3. What are the MAP voltage, MAP vacuum, and BARO values on the scan tool with the sensor unplugged and the engine running? Cycle the ignition and record MAP voltage, MAP vacuum, and BARO readings in the table below.

Scan Tool Data	Values
MAP Vacuum (in. Hg)	
MAP Voltage (V)	
BARO (in. Hg)	

4. With the ignition in the RUN position and the connector still unplugged, measure the voltage at each of the harness connector pins. Record the values you measured in the table below.

Pin Number	Voltage
1	
2	
3	

5. Monitor the scan tool. List any DTCs present.

_____

6. Start the vehicle with the MAP sensor still unplugged and let it idle, observe the MAP vacuum value. Is the value real or T-MAP? Where does the MAP vacuum value come from?

_____

7. Were any DTCs indicated? If yes, list the DTCs.

_____

Connect the MAP sensor connector to the extra MAP sensor and lay the sensor on the engine out of the way of any rotating components. Start the engine and monitor the scan tool.

8. What is your BARO value? Is the value different than what you recorded in question #2? Why or why not?

_____

_____

9. What is your MAP value? Is it real or T-MAP?

_____

10. How do the answers in question #2 and question #9 compare?

Turn the ignition OFF. Connect a hand vacuum pump to the MAP sensor vacuum port. Using the vacuum pump, apply 2–4 in. Hg of vacuum on the sensor. Turn the ignition ON and start the vehicle.

11. What is your BARO value? Is the value different than what you recorded in question #2?

---

12. Why did having 2–4 in. Hg of vacuum on the MAP have such a great impact on the BARO reading and the way the engine ran?

Turn the ignition OFF and disconnect the extra MAP sensor. Reconnect the MAP sensor connector to the sensor on the vehicle. Clear all DTCs.

Notes:

LESSON 2 PCM INPUTS (CONTINUED)

TWO-WIRE ANALOG SENSOR INPUTS

Figure 46 Typical NTC Thermistor

All two-wire sensors receive an individual 5V bias sensor signal from the PCM and may have a common sensor ground. Always refer to the appropriate wiring diagram for the vehicle.

NTC Thermistors

Temperature sensors are thermistors, resistors that significantly change resistance value with changes in temperature. All of the temperature sensors listed below are negative temperature coefficient (NTC) thermistors. This means that their resistance changes inversely with temperature. They have high resistance when cold and low resistance when hot.

The PCM sends 5V through a fixed resistor in the PCM to the sensor and measures the voltage drop between the fixed resistor and the variable resistor in the sensor. When the sensor is cold, its resistance is high and voltage sensed on the feed side remains high. As the temperature increases, sensor resistance drops and the signal voltage gets pulled low.

NTC Thermistor Circuit

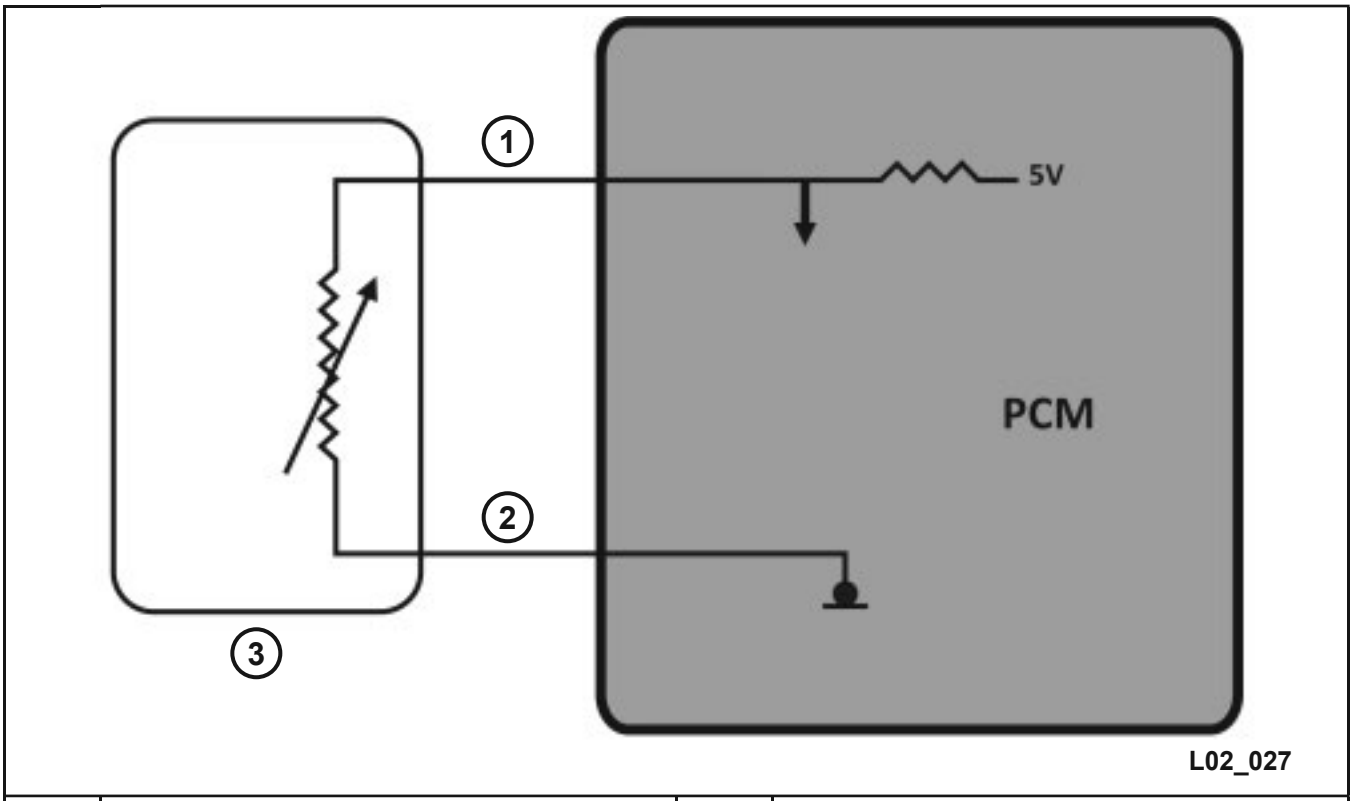

1	5V Reference	3	NTC Thermistor
2	Ground Circuit		

Figure 47 Typical NTC Thermistor Circuit

NTC Thermistor Temperature/Resistance Curve

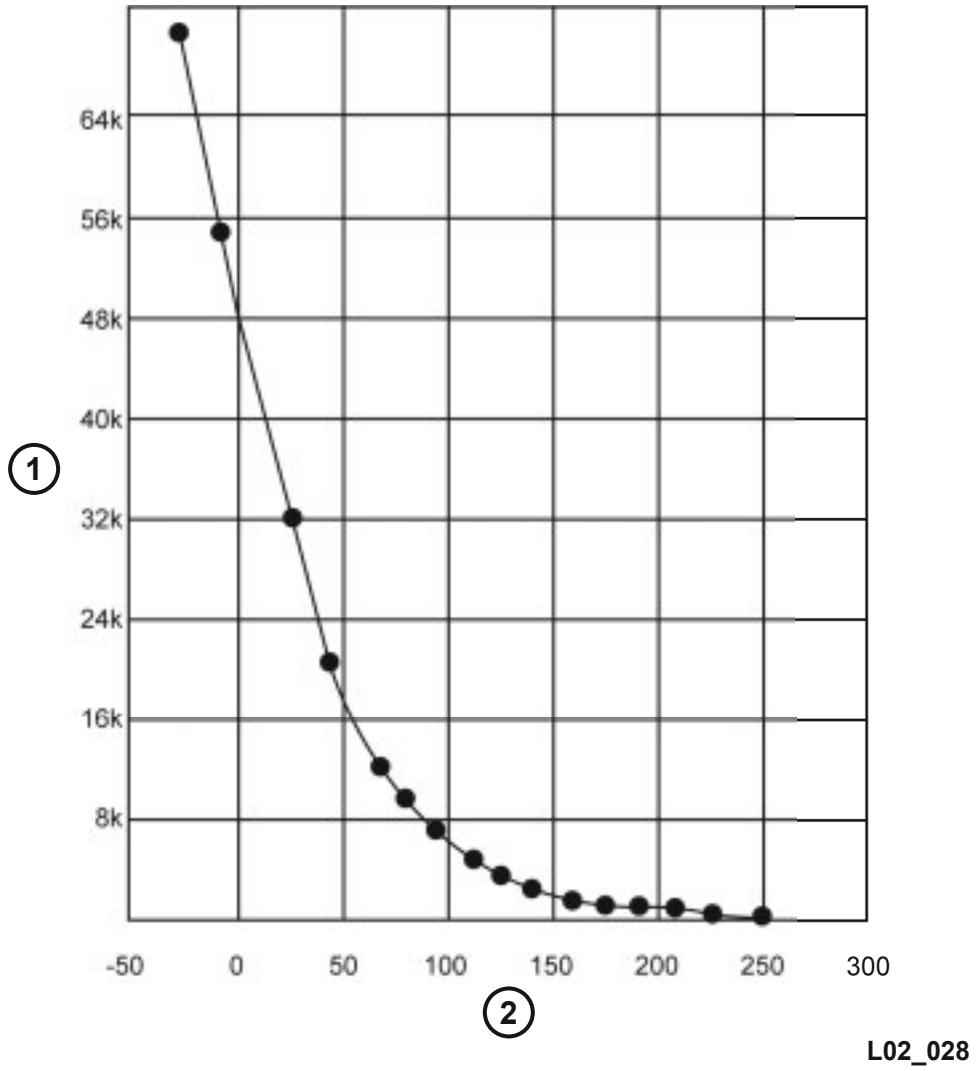

1	Resistance in Ohms	2	Temperature in Degrees Fahrenheit

Figure 48 Typical NTC Thermistor Temperature and Resistance Curve

Table 8 Typical NTC Sensor Temperature Resistance Values

TEMPERATURE		RESISTANCE (OHMS)	
°C	°F	MINIMUM	MAXIMUM
-40	-40	291,490	381,710
-20	-4	85,850	108,390
-10	10	49,250	61,430
0	32	29,330	35,990
10	50	17,990	21,810
20	68	11,370	13,610
25	77	9120	10,880
30	86	7370	8750
40	104	4900	5750
50	122	3330	3880
60	140	2310	2670
70	158	1630	1870
80	176	1170	1340
90	194	860	970
100	121	640	720
110	230	480	540
120	248	370	410

TEMPERATURE SENSOR RATIONALITY

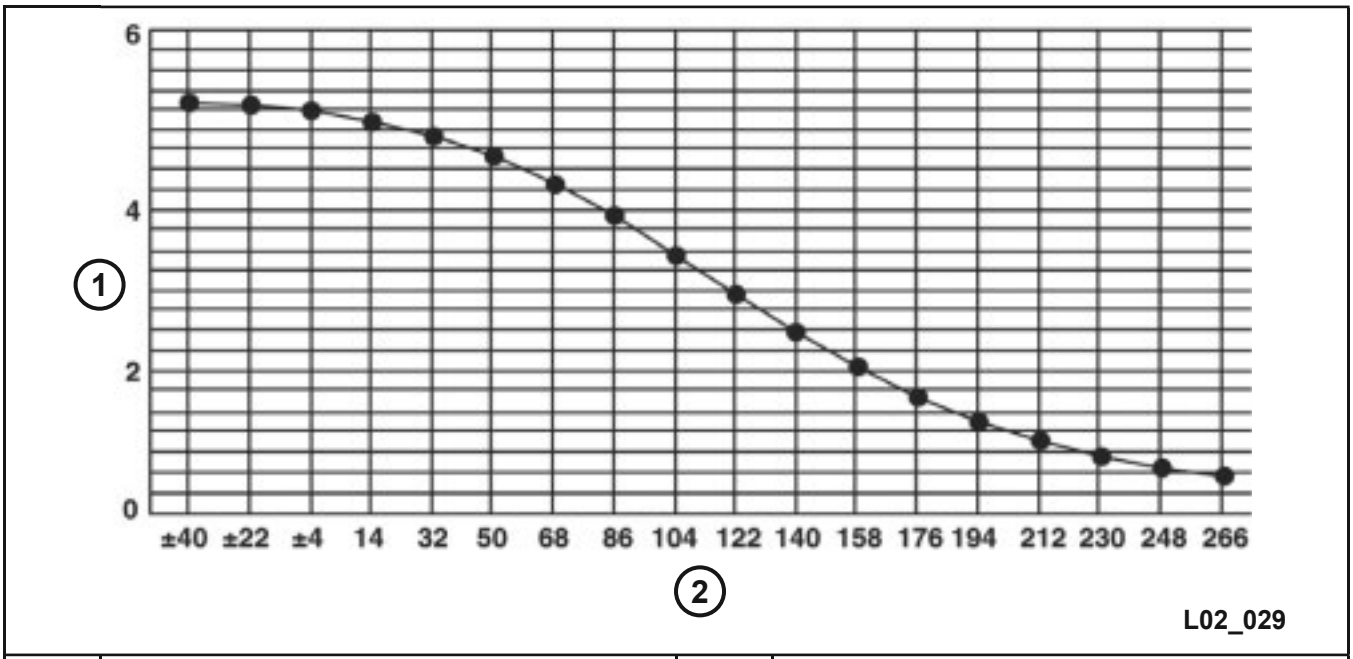

1	Sensor Voltage	2	Temperature in Degrees Fahrenheit

Figure 49 Typical NTC Thermistor Temperature and Voltage Curve

Comparing all of the temperature sensors on a cold engine is a diagnostic method to see if they all agree on the same temperature (example: intake air temperature, engine coolant temperature, and transmission temperature. If not, there may be a problem with the erroneous sensors or excessive resistance in the circuit wiring. Typically, the readings will be within 5°C (8 to 10 F°) of each other.

A DTC can set for this rationality check on some vehicles.

Engines that operate colder than normal (due to faulty thermostats, cooling system problems, or erroneous coolant sensor readings) will usually have reduced fuel economy.

Engine Coolant Temperature (ECT) Sensor

The ECT signal affects injector pulse-width, and enables OBDII monitors and cooling fan operation. Its biggest influence on pulse-width occurs with a cold engine, ignition-ON, to determine cranking injector pulse-width. After the vehicle has reached operating temperature, the PCM uses the ECT value to aid in calculating air density.

The ECT signal also affects spark advance curves, engine idle speed, cooling fan operation, A/C operation, transmission operation, and purge solenoid operation.

Engine Coolant Temperature (ECT) Sensor Diagnostics

There are four ECT sensor diagnostic routines:

- ECT sensor voltage too high (signal open) (5V)
- ECT sensor voltage too low (signal shorted to ground) (0V)
- ECT sensor too cold too long (rationality)
- Closed-loop temperature not reached (rationality)

When a hard fault occurs, a default temperature value will be substituted to keep the vehicle running properly, but the voltage value will define the fault.

Intake Air Temperature (IAT) Sensor

Air density changes as a factor of air temperature. The PCM uses the IAT signal to calculate the density of the incoming air. The IAT's greatest influence on pulse-width occurs during extremely cold intake air temperatures with wide open throttle conditions.

The IAT is typically located in the air intake tube, after the air cleaner but before the throttlebody.

Typically, the resistance specifications for the ECT and IAT sensors are the same.

Intake Air Temperature (IAT) Sensor Diagnostics

- Voltage too low (near 0V)
- Voltage too high (near 5V)

When the IAT sensor signal indicates a voltage that is too high or too low, the PCM moves into limp-in mode. In case of IAT failure, the PCM uses ambient air temperature for a limp-in value. The PCM uses the ambient air temperature sensor information as long as this information is believed to be accurate.

Intake air temperature sensor performance looks at the outputs of three temperature sensors and compares them under cold start conditions. Following a start-to-run delay time, the outputs of the ambient, engine coolant, and intake air temperature sensors will be compared. If the engine coolant and ambient air temperature sensors agree, and the intake air temperature does not agree, the intake air temperature sensor is declared as irrational. If declared irrational, a second comparison will be done after a short drive cycle. If one sensor value is not within 10 °C (18 °F) of the other temperature sensors for two consecutive trips, a fault will be set for that sensor.

Transmission Fluid Temperature Sensor

A transmission fluid temperature sensor provides information to the PCM or TCM (depending on application) of the transmission fluid temperature for transmission operation. The information from this sensor is used to validate other temperature sensors located on the engine.

Engine Oil Temperature Sensor

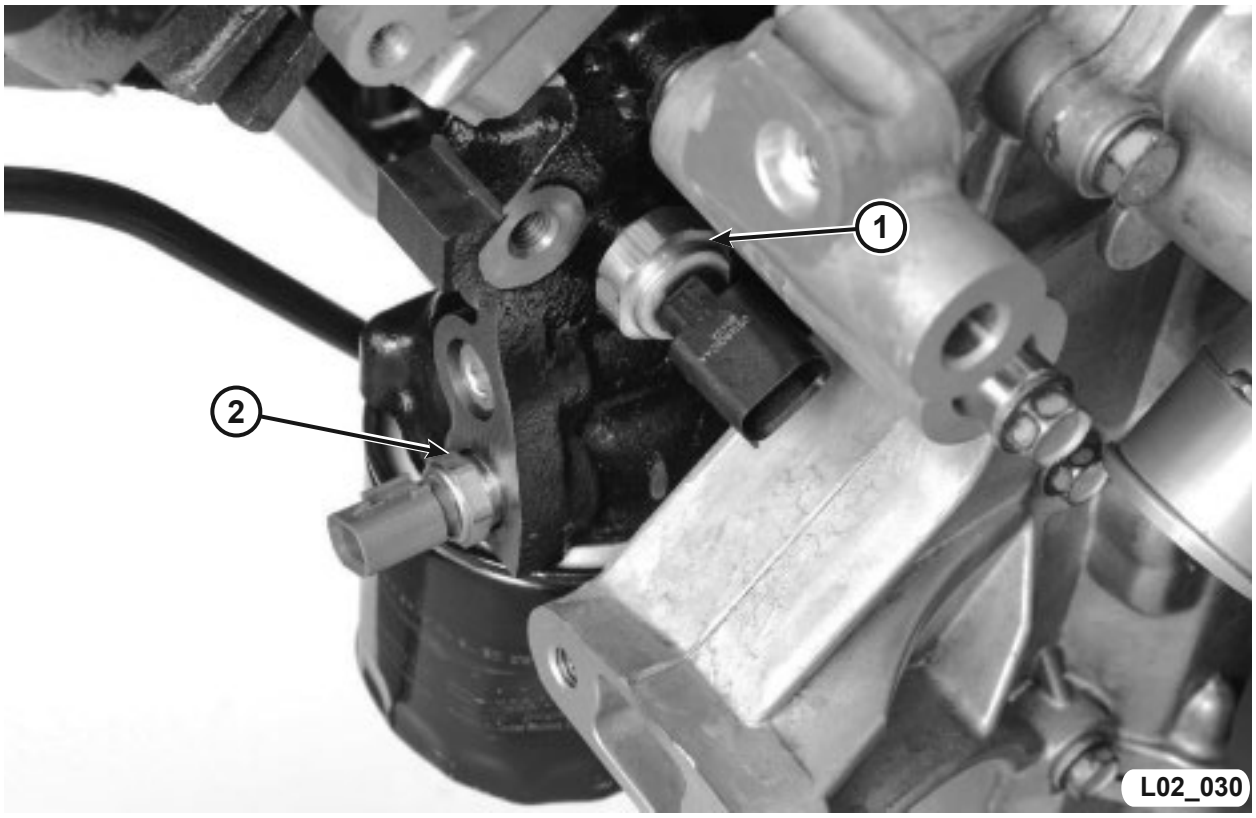

1	Engine Oil Pressure Sensor	2	Engine Oil Temperature (EOT) Sensor

Figure 50 EOT Sensor

The engine oil temperature sensor is used by engines that are equipped with variable valve timing, variable camshaft timing, and the multiple displacement system. These systems are discussed in the "Outputs" section of this Student Workbook.

OTHER PCM INPUTS

Sensed B+ Battery Voltage

The direct battery feed to the PCM is used as a reference to sense battery voltage.

Fuel injectors are rated for operation at a specific voltage. If voltage increases, the plunger will open faster and farther. If voltage is low, the injector will be slow to open and will not open as far. If sensed battery voltage drops, the PCM increases injector pulse-width to maintain the same volume of fuel through the injector.

If the charging voltage is too high, check the Voltage Sense value on the scan tool and verify it matches the actual battery voltage. If not, check resistance in the specified circuit.

The PCM has a circuit that measures the output of the alternator. It compares the Fused B+ and the alternator output. If the signals are inconsistent, battery charging shuts down to protect the components.

Knock Sensors

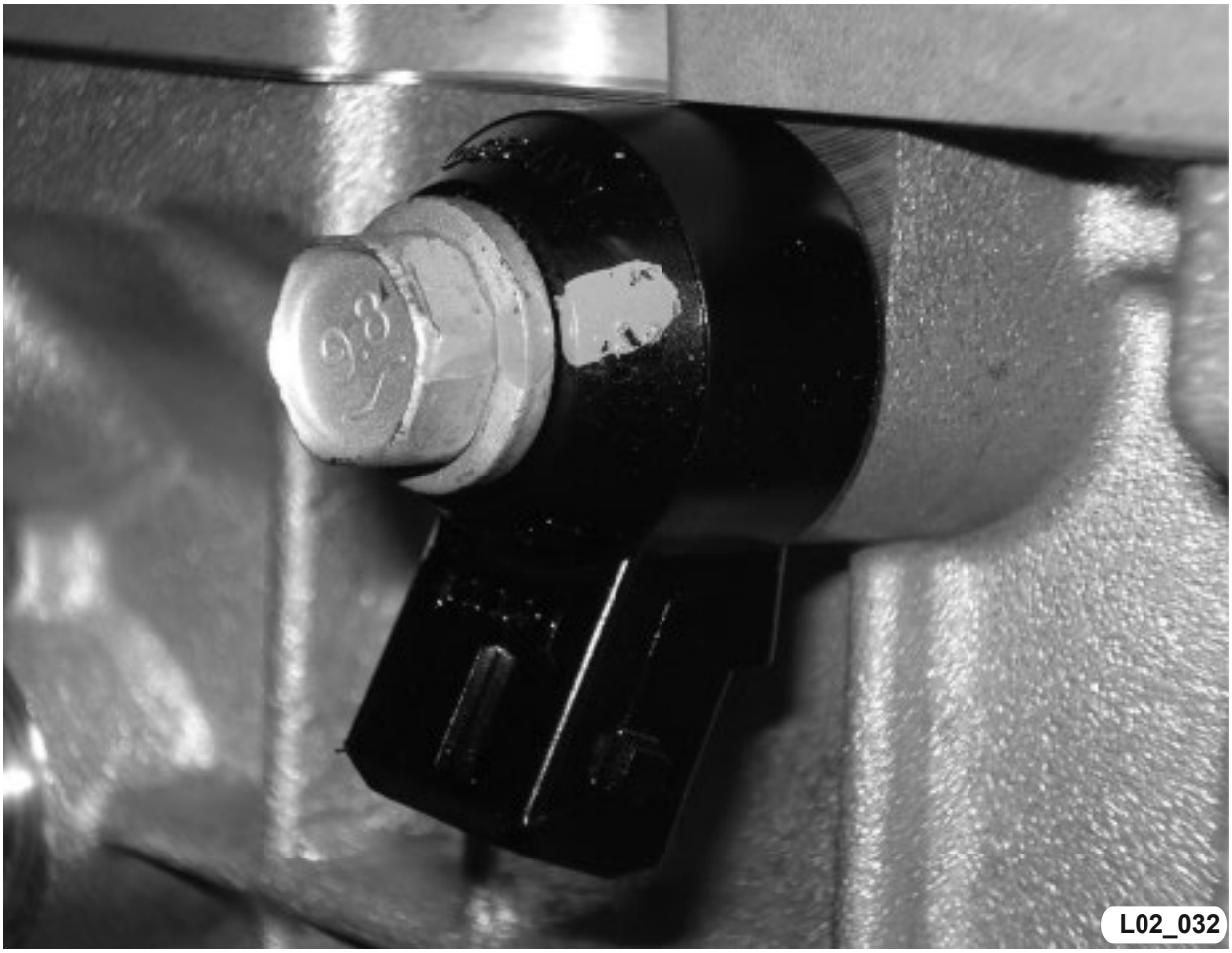

Figure 51 Typical Knock Sensor

Knock sensors contain a piezoelectric crystal that constantly vibrates and sends an input voltage (signal) to the PCM while the engine operates. As the intensity of the crystal's vibration increases, the knock sensor output voltage also increases.

The voltage signal produced by the knock sensor increases with the amplitude of vibration. The PCM receives the knock sensor voltage signal as an input. If the signal rises above a predetermined level, the PCM will store that value in memory and retard ignition timing to reduce engine knock. The PCM ignores knock sensor input during engine idle conditions. If the knock sensor voltage exceeds a preset value, the PCM retards ignition timing for all cylinders. It is not a selective cylinder retard.

NOTE: Using regular unleaded fuel in vehicles that recommend premium fuel may reduce fuel mileage due to engine knock being detected and the spark curve being retarded from optimal spark advance.

Notes:

Notes:

ACTIVITY 2 DIAGNOSE SENSOR INPUTS (CONTINUED)

TASK THREE: INTAKE AIR OR COOLANT TEMPERATURE SENSOR CIRCUIT DIAGNOSIS

Answer the following questions as you complete the activity.

1. With the ignition ON, connect a scan tool to the vehicle and navigate to the PCM Data tab. Record the IAT/ECT voltage and temperature.

_____

2. Unplug the IAT/ECT sensor connector. Record the voltage and temperature values displayed on the scan tool with the sensor unplugged.

_____

3. Using a DMM, measure the voltage at each of the harness connector pins and record the values below.

_____

4. Navigate to the DTC tab on the scan tool, what DTCs are present? **Do not erase DTCs**.

_____

5. With the IAT/ECT sensor connector still unplugged, navigate to the Data tab, observe the IAT/ECT volts and temperature. Using a fused jumper wire, short the two sensor wires together and record the values below.

_____

6. Connect a scan tool to the vehicle. What DTCs are active?

_____

7. By unplugging and shorting the IAT/ECT connector, what was just tested?

_____

8. If the answer to question #5 was no change in voltage (5V), what might this indicate?

_____

9. With the IAT/ECT sensor connector still unplugged, short the sensor signal wire to a good ground and record the values below. What does this indicate?

_____

10. If the reading did not change, what would this indicate?

_____

Reconnect the sensor.

11. If a vehicle cold soaked overnight and you monitored the data with a scan tool, should there be a difference between ECT, IAT, ATS, and transmission temperature values on a cold vehicle?

_____

12. If you suspected a specific temperature sensor, would this rationality comparison method help? How?

_____

_____

_____

Verify all sensors are reconnected and erase all DTCs.

Notes:

Notes:

LESSON 2 PCM INPUTS (CONTINUED)

OXYGEN SENSORS

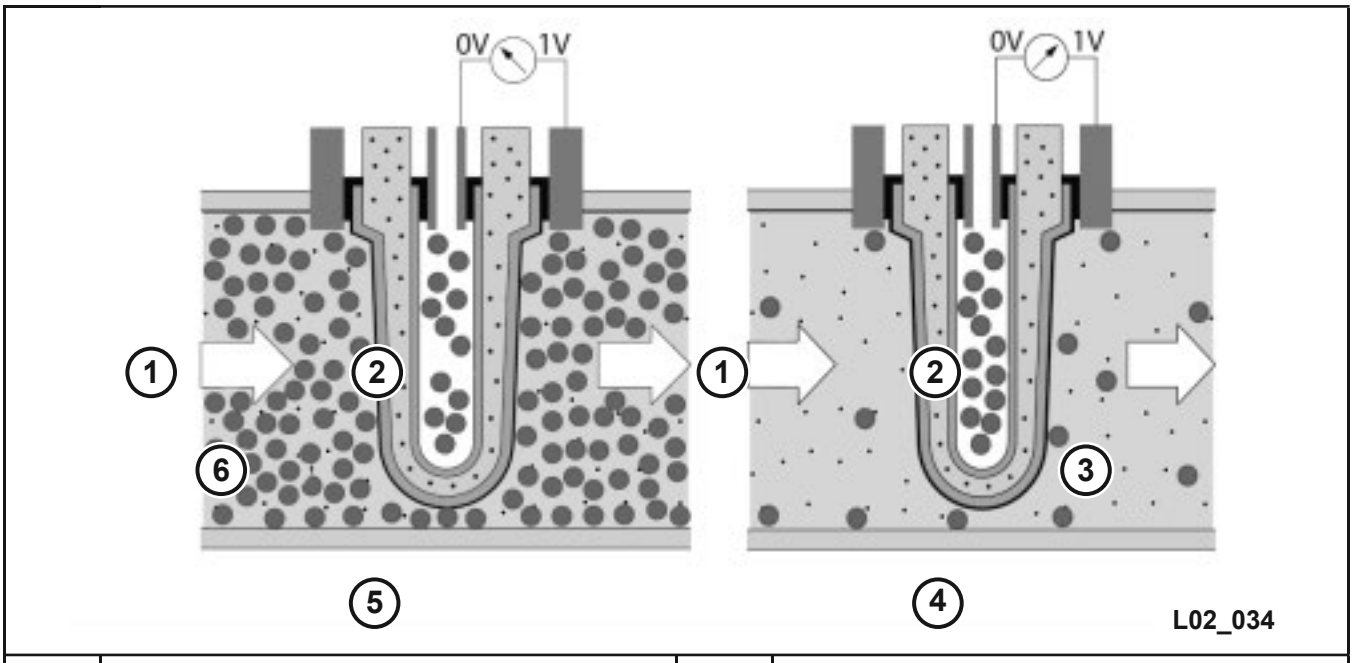

1	Exhaust Flow	4	Rich Exhaust
2	Ambient Oxygen	5	Lean Exhaust
3	Low Oxygen Content	6	High Oxygen Content

Figure 52 Oxygen Sensor Operation

The heated oxygen sensors are four-wire, zirconium dioxide sensors placed in the exhaust system to measure oxygen content in the exhaust stream.

After the sensor reaches approximately 315.5 °C (600 °F), the oxygen sensor becomes a galvanic battery that typically generates a voltage signal of 0.0–1.0V. This is the operating voltage of the sensor without being connected to the PCM wire harness. The sensor alone generates this voltage. When the oxygen sensor is connected to the PCM wire harness, and the signal is monitored using a scan tool or a voltmeter, you will see 2.5–3.5V (some PCMs will display both voltage readings, biased and unbiased). This function of supplying 2.5 volts on the oxygen sensor return began with the introduction of the NGC PCM. The sensor return being biased at 2.5V prevents the oxygen sensor voltages from inverting and going below 0V. If the voltage goes below 0V, it would result in a possible open-loop condition that could occur under the following conditions:

- Sensor contamination
- Oxygen air inlet clogged (preventing oxygen from being drawn into the sensor via the wiring harness)
- High-load, extreme heat conditions (trailer towing up a mountain in the desert)

Oxygen Sensor Signal Circuit

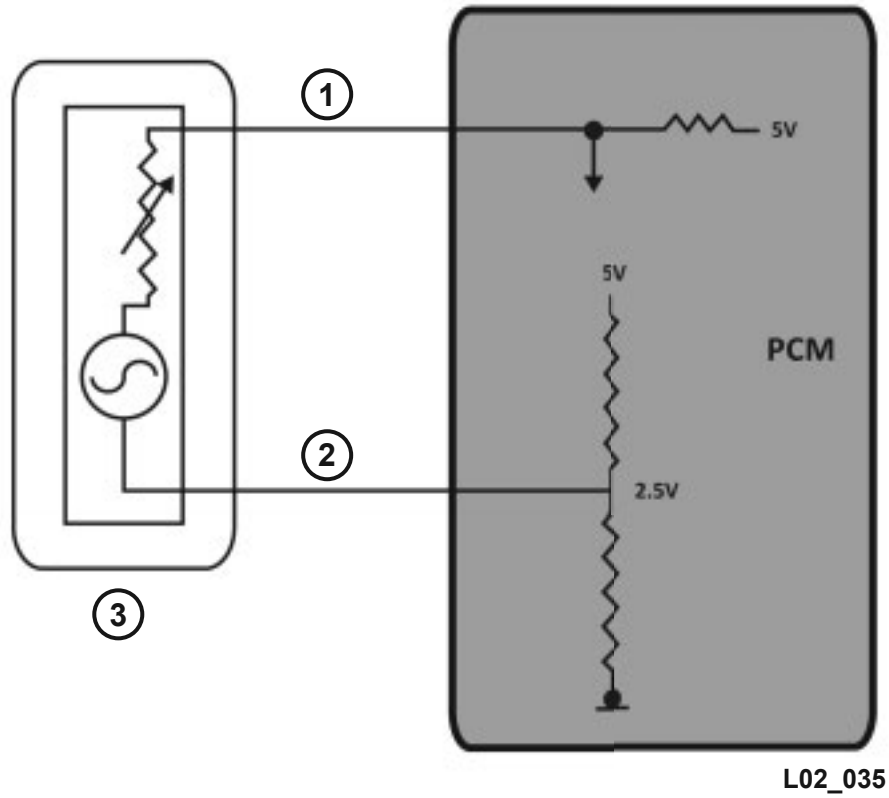

1	Oxygen Sensor 5V Signal Circuit	3	Oxygen Sensor
2	2.5V Bias on Ground Circuit		

Figure 53 Oxygen Sensor Signal Circuit

The PCM determines the air/fuel ratio from this information on oxygen content in the exhaust. The PCM then adjusts injector pulse-width in order to achieve optimum air/fuel ratio, proper engine operation, and control emissions. In order for the oxygen sensor to function properly, outside air needs to enter the inside chamber of the sensor. The sensor compares the difference in oxygen content between the inside chamber and exhaust gases contacting the outer surface area.

The PCM supplies a 5V bias voltage to the oxygen sensor circuit to monitor for heater performance. When the sensor is cool (generally within 10 minutes after engine shutdown) it has high resistance. This causes the bias voltage to stay high (5V); if the oxygen sensor heater begins to function, the sensor gets hot (approximately 538 °C [1000 °F]) very quickly. The signal voltage is now pulled low because the hot sensor has less internal resistance. The bias voltage within the system is used for heater verification and oxygen sensor circuit diagnostics. If the oxygen sensor is cold, and the scan tool does not indicate 5V for the sensor (make sure you are looking at the correct value), try unplugging the oxygen sensor connector. If the scan tool now indicates 5V, the sensor is most likely defective.

Oxygen Sensor Locations and Naming

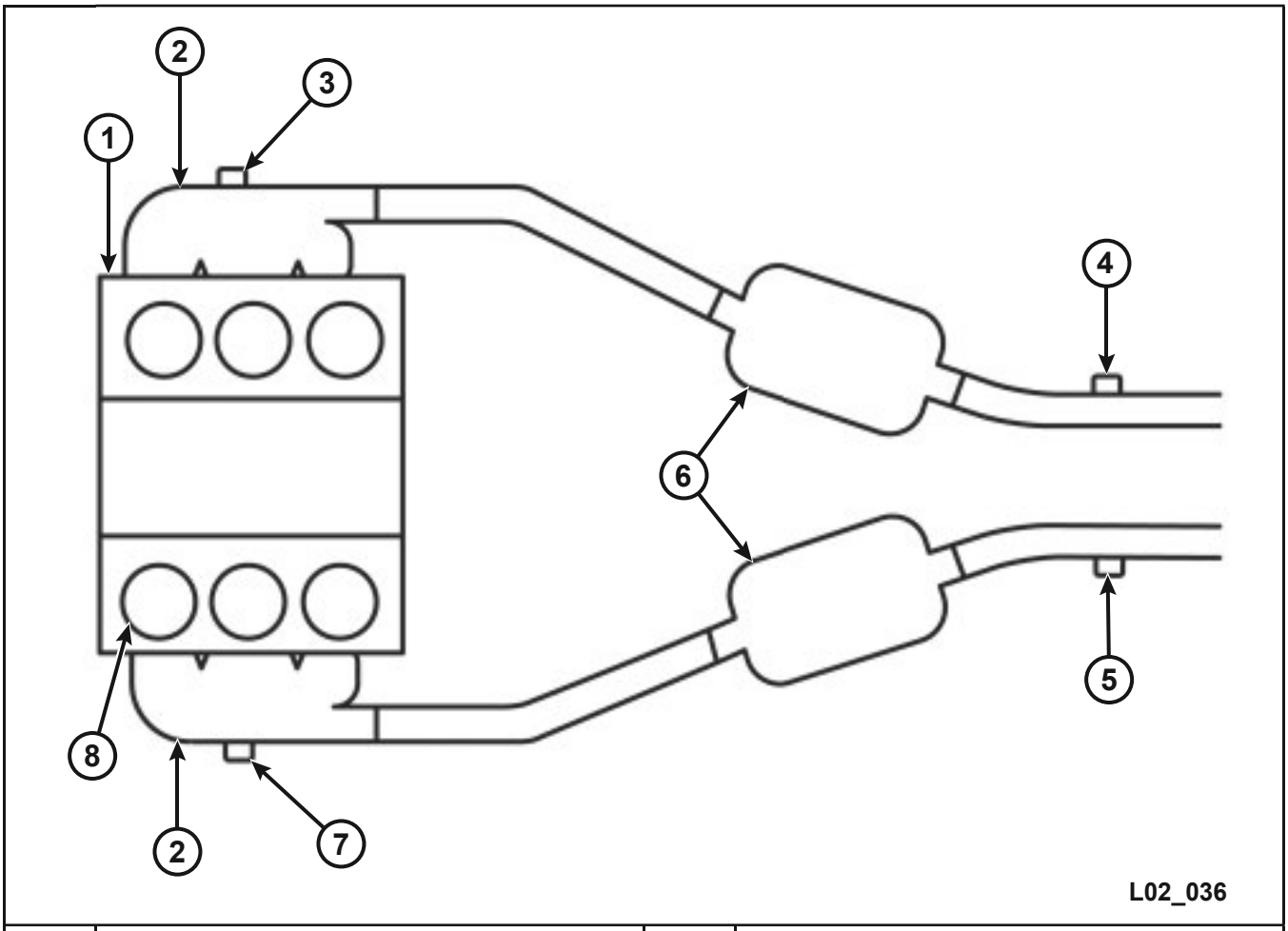

1	Engine	5	Oxygen Sensor (1/2)
2	Exhaust Manifold	6	Catalytic Converter
3	Oxygen Sensor (2/1)	7	Oxygen Sensor (1/1)
4	Oxygen Sensor (2/2)	8	Cylinder Number 1

Figure 54 Oxygen Sensor Naming Conventions (V-6 shown)

Starting in 1996, all vehicles use at least one upstream and one downstream oxygen sensor. Oxygen sensors are typically identified as 1/1, 1/2, 1/3, 2/1, etc. The first digit indicates the bank of the engine that the oxygen sensor is located. If the first digit is numbered 1, this indicates the oxygen sensor is on the same bank as the number 1 cylinder. If the first digit is numbered 2, this indicates the oxygen sensor is on the same bank as the number 2 cylinder. The second digit represents upstream (1), downstream (2), or mid-catalyst (3) locations. As an example, 1/2 would represent an oxygen sensor located downstream, on the bank with the number 1 cylinder. Upstream and downstream sensors operate in a similar way, but may not be interchangeable due to physical differences.

Open-loop Operation

The PCM is in open-loop mode during a cold start and when the oxygen sensors are below 349 °C (660 °F), or when the engine is operated at wide open throttle (WOT). During open-loop operation, the PCM ignores the oxygen sensors and performs air/fuel ratio adjustments based on pre-programmed values and inputs from other sensors.

Closed-loop Operation

A heater element heats the oxygen sensor; bringing it to operating temperature and allowing it to enter closed-loop operation quickly (approximately 10 seconds). Closed-loop operation is dependant on:

- Engine temperature
- Oxygen sensor temperature
- PCM Timers
  - All timers have timed out following the start-to-run transfer (timer lengths vary, based on engine temperature at key ON); the oxygen sensor must read greater than 3.25V or less than 2.6V.

In closed-loop operation, the PCM monitors oxygen levels in the exhaust and makes air/fuel ratio adjustments based on oxygen sensor feedback. The upstream oxygen sensor voltage signal verifies that the fuel system is operating at the 14.7:1 stoichiometric ratio.

At 14.7:1, the oxygen sensor voltage will fluctuate between 2.5V and 3.5V. When the oxygen sensor detects high oxygen content, the signal voltage will be closer to 2.5V. A low oxygen content will result in a voltage signal closer to 3.5V.

Zirconium oxygen sensors do not respond in a linear way. The voltage generated by the sensor is consistently high at air/fuel ratios richer than ideal (low oxygen), and the voltage generated is consistently low at air/fuel ratios leaner than ideal (high oxygen). The sensor signal voltage switches dramatically at the stoichiometric ratio and is relatively unchanging at all other air/fuel ratios. This means that the oxygen sensor signal can tell the PCM that the air/fuel ratio is leaner or richer than stoichiometric, but it cannot tell the PCM how rich or how lean the mixture is.

When voltage exceeds preset high or low thresholds, called switch points, the PCM begins to add or remove fuel until the change in oxygen content causes the sensor to reach its opposite preset threshold. The process then repeats itself in the opposite direction.

Oxygen Sensor Signal

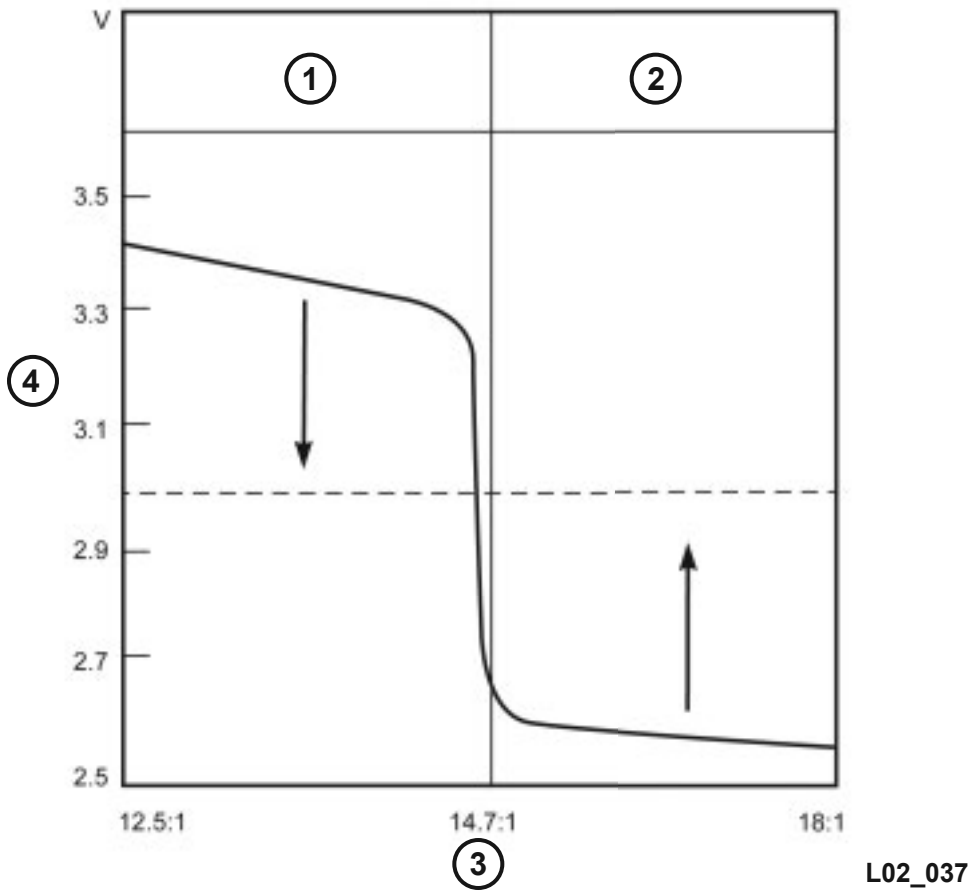

1	Lack of Oxygen	3	Air/Fuel Ratio
2	Excessive Oxygen	4	Sensor Voltage

Figure 55 Oxygen Sensor Signal

Oxygen Sensor Diagnostics

The oxygen sensor must have a source of oxygen from outside the exhaust stream for comparison. Oxygen sensors receive their fresh oxygen supply through the sensors' wire harness. Never solder an oxygen sensor circuit from the connector to the actual sensor or pack the connector with grease. If the engine develops any type of leak that allows fluids into the oxygen sensor electrical connector, this may result in a sensor failure.

Exhaust system leaks upstream or downstream of the oxygen sensor can allow ambient air to be drawn into the exhaust stream. The sensor will report this extra oxygen to the PCM, and the PCM may incorrectly add extra fuel to compensate.

If there is an oxygen sensor fault, it could be caused by any of the following: oxygen sensor, circuit wiring, or the PCM. You can validate the PCM and circuit wiring by watching the scan tool and disconnecting the oxygen sensor connector; the scan tool data display will show 5V. You can jumper the oxygen signal circuit on the vehicle harness side to the oxygen sensor return on the harness side and observe the scan tool; it should change to 2.5V, indicating the PCM and circuits are good. If no change occurs and the scan tool still shows 5V, then jumper the oxygen signal circuit to a good ground and the scan tool should show 0V (indicating the signal wire is good, but the ground wire must be open). If no change occurs, you will need to check the signal line for an open circuit.

When reinstalling the original oxygen sensor, coat the sensor threads with an anti-seize compound such as Loctite 771-64 or equivalent. New sensors have compound on the threads and do not require an additional coating. Do not add any additional anti-seize compound to the threads of a new oxygen sensor.

Downstream Oxygen Sensor

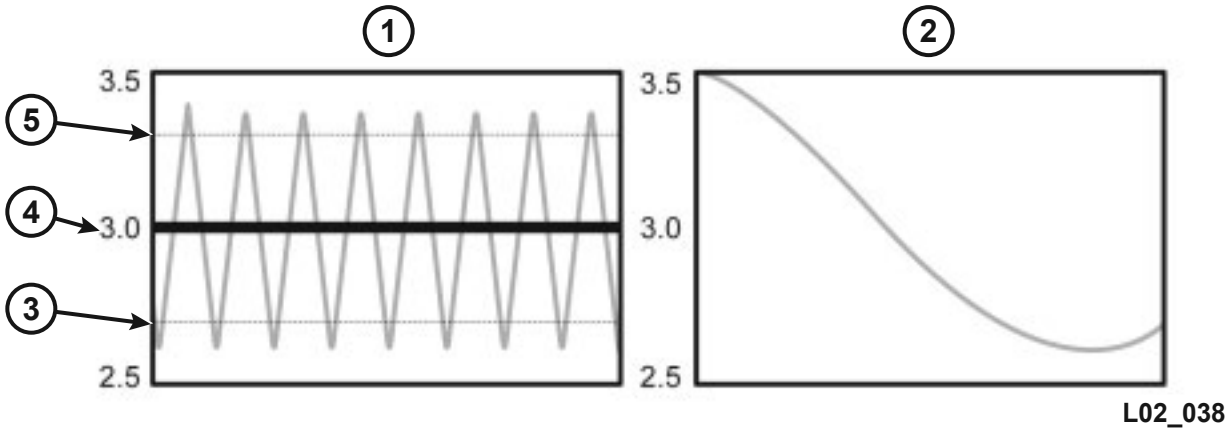

1	Upstream Oxygen Sensor	4	Goal Voltage
2	Downstream Oxygen Sensor	5	Upper Switch Point
3	Lower Switch Point		

Figure 56 Upstream and Downstream Oxygen Sensor Signal with Efficient Catalyst

Depending on the vehicle's emission calibration, it may be equipped with multiple upstream and downstream oxygen sensors. Downstream sensors have two functions. The first function is to measure catalyst efficiency to meet OBDII requirements. If the catalytic converter is working properly, the oxygen content of the exhaust gases at the converter outlet fluctuate significantly less than at the converter inlet. The PCM compares the switching rates of both downstream and upstream oxygen sensors under specific operating conditions to determine if the catalyst is functioning properly. Any time the upstream-to-downstream switching ratio exceeds a calibrated value, a catalyst efficiency fault will be stored.

Shift to Reduce High Oxygen Content

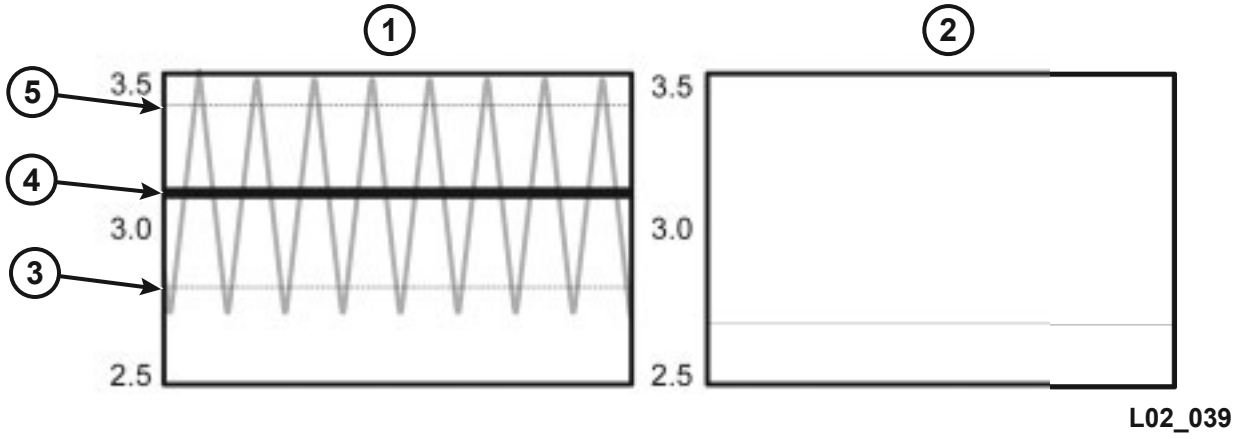

1	Upstream Oxygen Sensor	4	Goal Voltage
2	Downstream Oxygen Sensor	5	Upper Switch Point
3	Lower Switch Point		

Figure 57 Goal Voltage and Switch Points Shift to Reduce High Oxygen Content

The second function is downstream fuel control. This function adjusts the upstream oxygen goal voltage within the range of operation of the upstream oxygen sensor. The upstream goal voltage is used to ensure long catalytic converter life by allowing the PCM to control the amount of air and fuel that is supplied to the catalytic converter. The goal voltage becomes the target that the PCM uses to make sure the upstream oxygen sensor switches above and below a target threshold.

Before 1996, the goal voltage was a pre-programmed fixed value based upon where it was believed the catalyst was most efficient. While the upstream oxygen sensor input was used to maintain the 14.7:1 air/fuel ratio, variations in engines, exhaust systems, and catalytic converter aging can cause this ratio to be less than ideal for a given vehicle. If the gases leaving the catalyst contain too much oxygen, the mixture is too lean. The PCM responds by raising the upstream oxygen goal voltage. This increases fuel quantity and reduces excess oxygen.

Shift to Reduce Low Oxygen Content

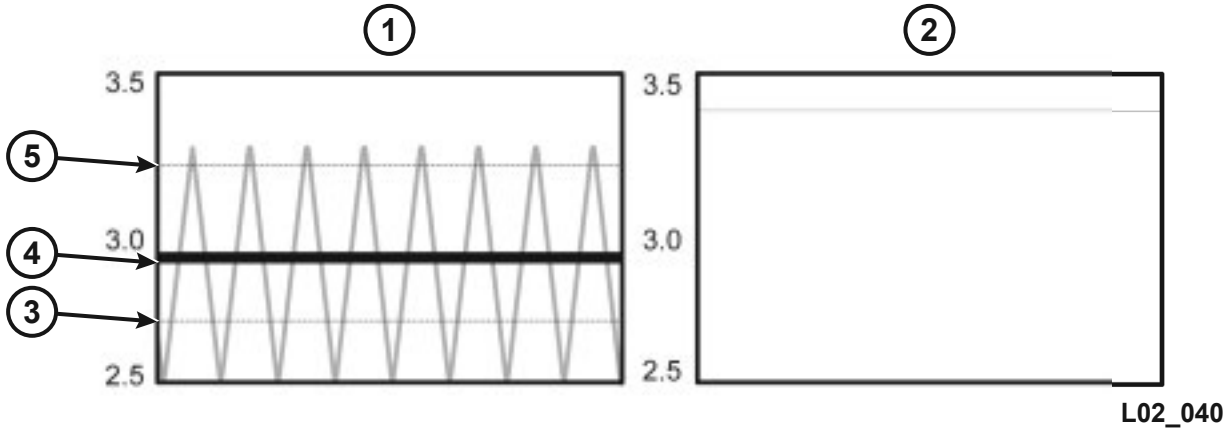

1	Upstream Oxygen Sensor	4	Goal Voltage
2	Downstream Oxygen Sensor	5	Upper Switch Point
3	Lower Switch Point		

Figure 58 Goal Voltage and Switch Points Shift to Increase Low Oxygen Content

If the gases leaving the catalyst do not contain enough oxygen, the PCM lowers the upstream oxygen goal voltage. This reduces fuel quantity and increases excess oxygen. This function is active only during closed-loop operation.

Oxygen Sensor Heaters

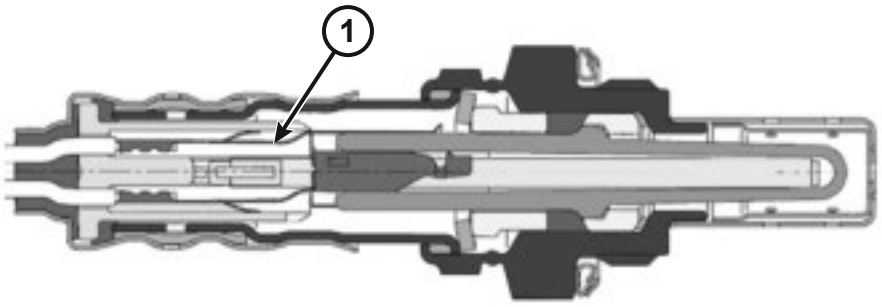

1	Heater Element

Figure 59 Oxygen Sensor Cutaway Showing Heater

Beginning with the NGC PCM, and continuing to the present, the oxygen sensor heaters are controlled using PWM high-side drivers. Prior systems used the ASD for power feed, and the ground was either attached to the engine or chassis. Eventually the PCM progressed and the ground was controlled by the PCM using a PWM low-side driver.

All current application oxygen sensor heaters are controlled using a PWM high-side driver.

Some of the advantages of the PWM heaters are:

- Meets tighter low-emission vehicle (LEV) and ultra-low-emission vehicle (ULEV) emissions regulations
- Allows closed-loop operation as early as 5 to 10 seconds after start
- Delays activation after an overnight soak to allow moisture to burn off (to prevent cracking of the thimble)

In addition, the high-side driver circuit is capable of detecting circuit failures immediately and setting a DTC. Because of this detection, oxygen sensor circuits are now considered comprehensive components.

Oxygen Sensor Heater High-side Driver Circuits

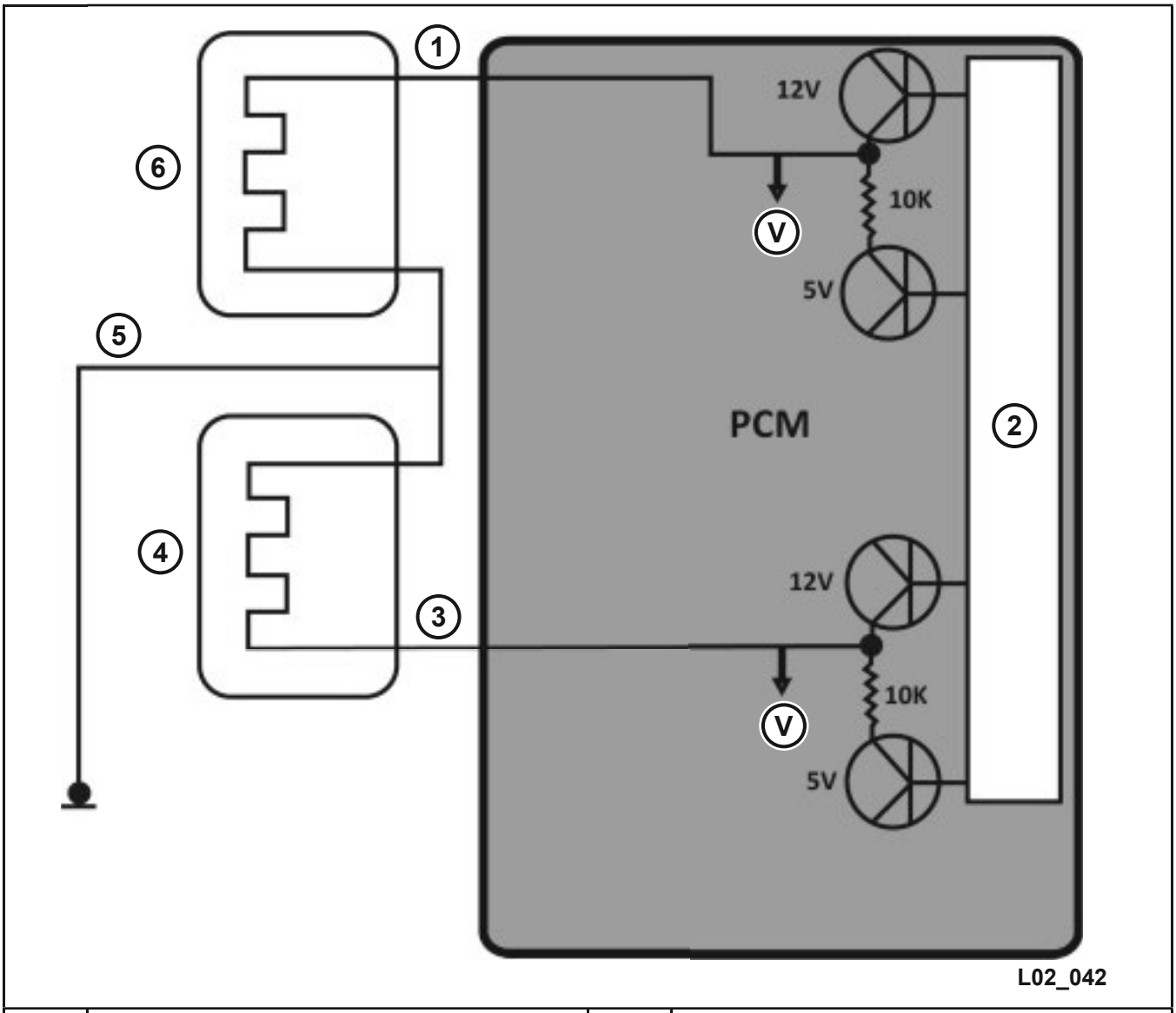

1	Bank 1 Oxygen Sensor 1 Heater Supply Circuit	4	Bank 1 Sensor 2
2	Internal Processor	5	Heater Ground Circuit
3	Bank 1 Oxygen Sensor 2 Heater Supply Circuit	6	Bank 1 Sensor 1

Figure 60 Oxygen Sensor Heater High-side Driver Circuits

In the past, the only way to set a fault was during the once-per-trip monitor.

In the PCM, the PWM is modified in response to heater temperature in order to achieve a desired temperature target. The heater temperature is measured by passing current through a resistor connected in series with each heater element. The voltage drop across the resistor is used to calculate the current and the temperature.

Oxygen Heater Diagnostics

In addition to monitoring the oxygen sensor on the scan tool at start-up and monitoring the 5V signal voltage drop, there are additional diagnostic tests that can be performed.

First, disconnect the oxygen sensor from the vehicle wire harness, and use an ohmmeter to check the oxygen heater resistance. A general resistance value for this sensor is 4–20 ohms (check the diagnostic test procedures for actual specifications). This will at least indicate if the heater has an open or shorted circuit.

The second test uses the scan tool to perform an actuator test while monitoring the circuits with a voltmeter and substituting a known good oxygen sensor to provide a similar load.

NOTE: The PCM may be damaged if circuit testing is done without a proper load.

Finally, if the PCM detects a fault on the heater circuit, it will set a DTC and shut down the high-side driver. If the fault is corrected and a key cycle is performed, the high-side driver will attempt to function again and the DTC status should become stored.

Wide Band Oxygen Sensor

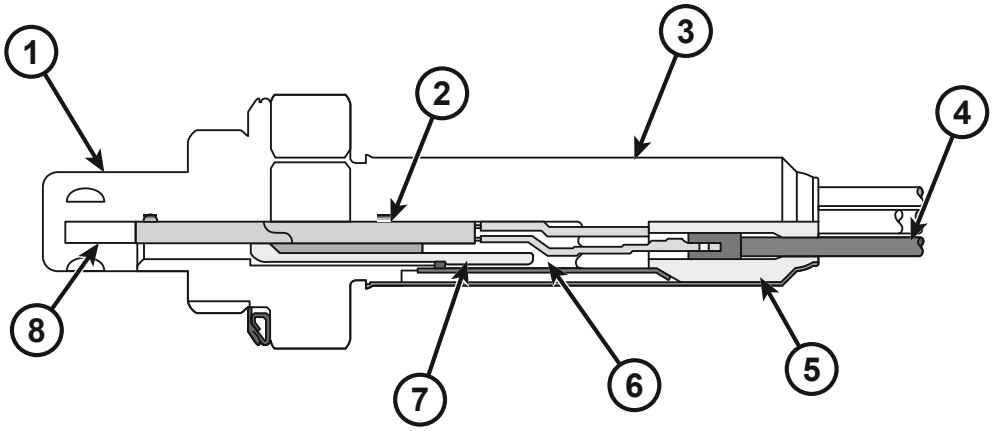

1	Protective Metal Tube	5	Seal
2	Ceramic Substrate	6	Glass Seal
3	Outer Metal Body	7	Ceramic Bracket
4	Signal Wire	8	Zirconium Sensor Tip

Figure 61 Upstream Oxygen Sensors

The upstream oxygen sensor is a fast-acting, wide band oxygen sensor that measures oxygen content in the exhaust gas. The sensing element uses zirconium dioxide (ZrO2), or zirconium, in a ceramic substrate. The sensing element creates a voltage in response to oxygen levels.

The upstream oxygen sensor also contains an oxygen pumping function that provides the wide-band sensing capabilities. The pumping feature is critical for proper oxygen measurement.

The sensing element is bonded to an alumina ceramic layer that contains a heating element. The quick-acting heater allows the sensor to reach operating temperature in less than 8 seconds. The operating temperature ranges from 600 °C to 830 °C (1112 °F to 1526 °F). The sensor can withstand temperatures of up to 950 °C (1742 °F).

The connector is completely sealed and waterproof because there is no need for a reference sample of atmospheric oxygen.

Zirconium Type Oxygen Sensors

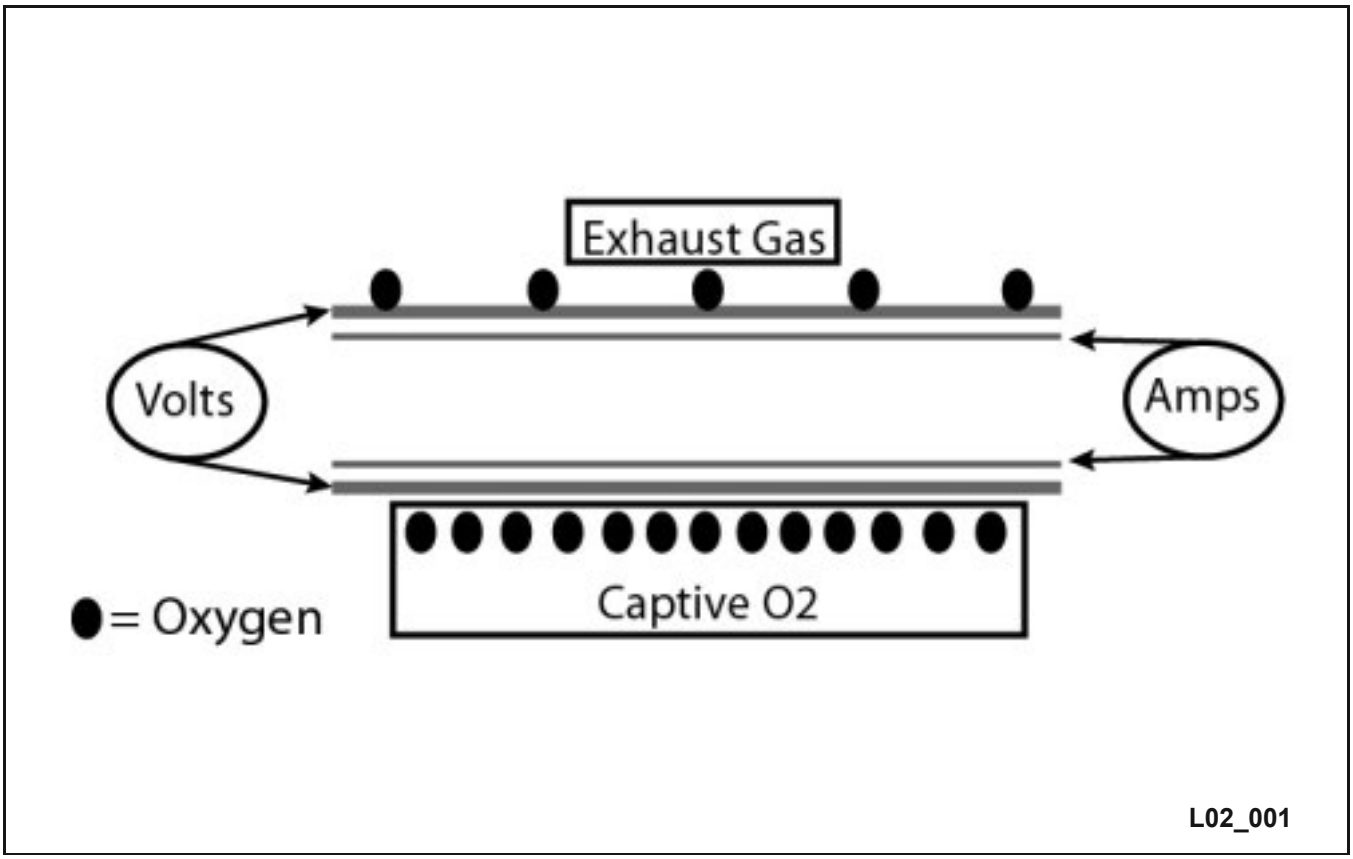

Figure 62 Zirconium Sensors

The sensor tip of the upstream oxygen sensor contains two layers of zirconium that provide different, nearly opposite functions.

The sensing layer of zirconium functions like a traditional oxygen sensor. This layer creates a voltage (0–1 volt) in response to oxygen content. Voltage is created because a higher concentration of oxygen on one side of the zirconium compared to the other side forces oxygen ions (with a negative charge) across the zirconium.

The pumping layer of zirconium is supplied a current so that oxygen ions are forced to move across the zirconium. When the oxygen ions are forced across the zirconium, oxygen is pumped from one side of the zirconium layer to the other.

Cross Section of Zirconium Oxygen Sensor

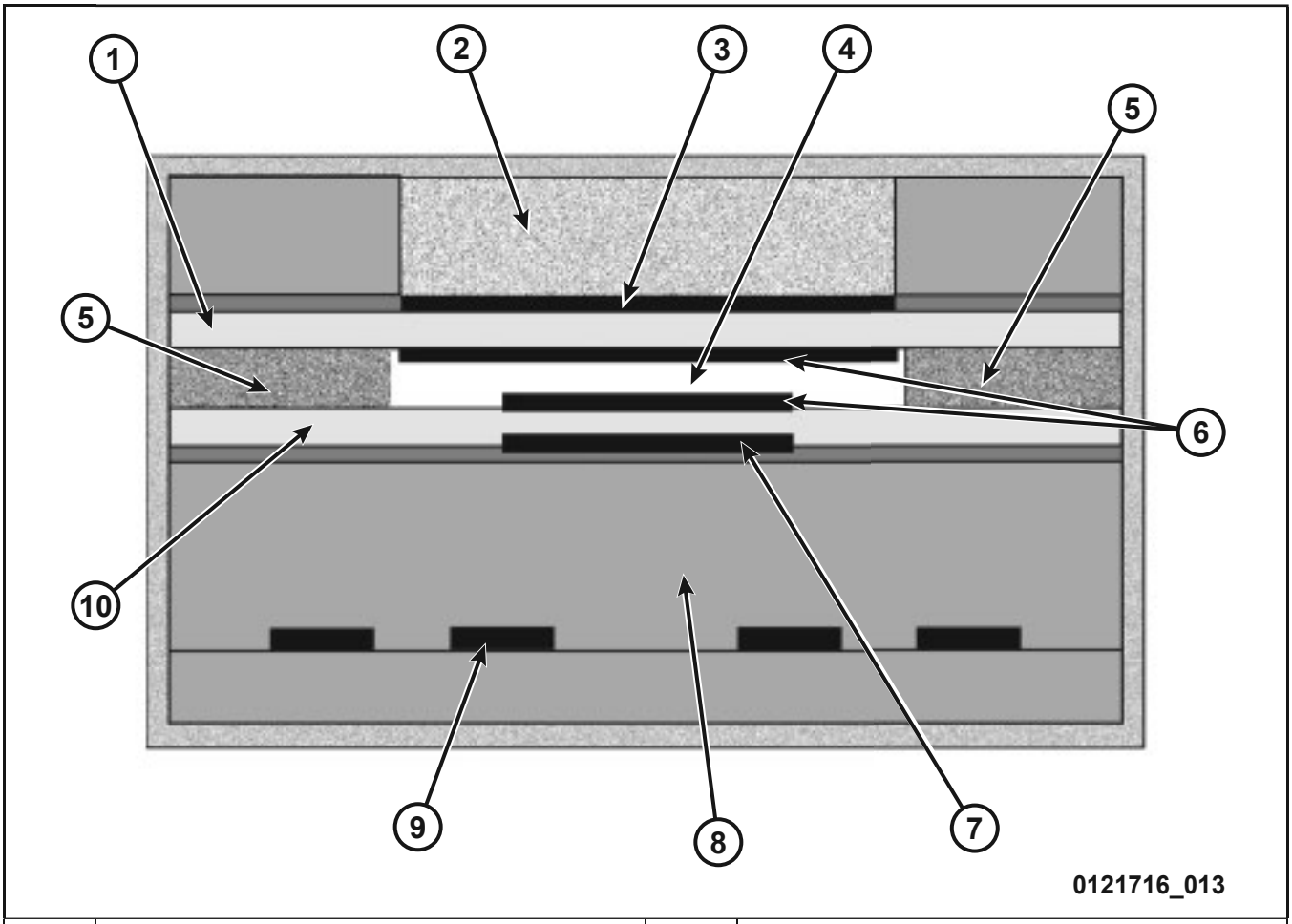

1	Pumping Element (Ip) Cell	6	Common Bias Electrodes (Ip- and Vs-)
2	Porous Layer	7	Vs+ Sensing Cell Electrode
3	Ip+ Pumping Electrode	8	Aluminium Oxide Ceramic Material
4	Detection Cavity	9	Heater Elements
5	Diffusion Barrier	10	Voltage Sensing (Vs) Cell

Figure 63 Upstream Oxygen Sensor Sensing Element Cross-sectional View

The cross-sectional view of the upstream oxygen sensor tip shows the voltage sensing cell (10) and pumping cell (1) laminated into the sensor tip assembly. The sensing and pumping cells are laminated with layers of alumina ceramic, a porous layer, that allows oxygen flow and a passage that allows exhaust gases to flow into the open detection measurement cavity.

The entire sensor element is in the exhaust flow, which allows extremely quick response. The pumping cell constantly adjusts the amount of oxygen in the measurement chamber.

Note that there is no ambient oxygen supplied to the sensor. At key ON, the sensing element electrodes are powered to pump oxygen to the lower electrode. This captured oxygen creates a layer of reference oxygen, which resides with the lower electrode during engine operation. By doing so, the need for ambient oxygen is eliminated.

Lean Air/Fuel Ratio Exhaust Gas

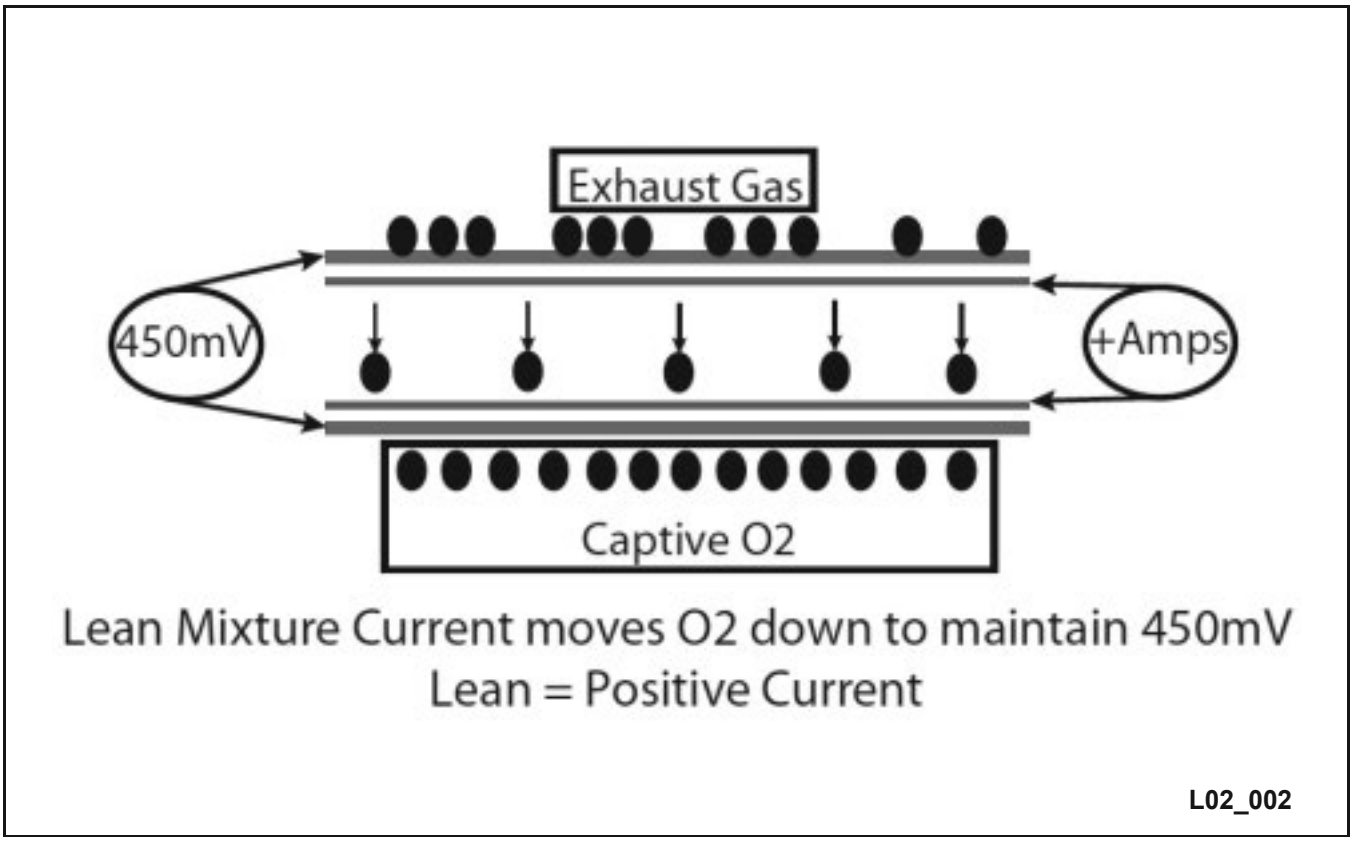

Figure 64 Lean Air/Fuel Ratio Exhaust Gas

The exhaust flow from a lean air/fuel ratio will have a relatively high oxygen content in the detection cavity. When this is the case, current will be pumped from Ip+ (Positive Pumping Current Control circuit) to the Ip- or the common bias circuit (O2 Return circuit) to cause oxygen to move out of the detection cavity.

The scan tool will read a positive pumping current (mA) when the condition is lean. You can also measure this amperage using a multimeter and Mopar special tool 10367, Wideband O2 Sensor Diagnostic Adapter.

Because the pumping layer works very quickly, the sensing layer voltage (O2 Signal circuit) should remain at or near 0.450 volts, even when the air/fuel ratio is lean.

Rich Air/Fuel Ratio Exhaust Gas

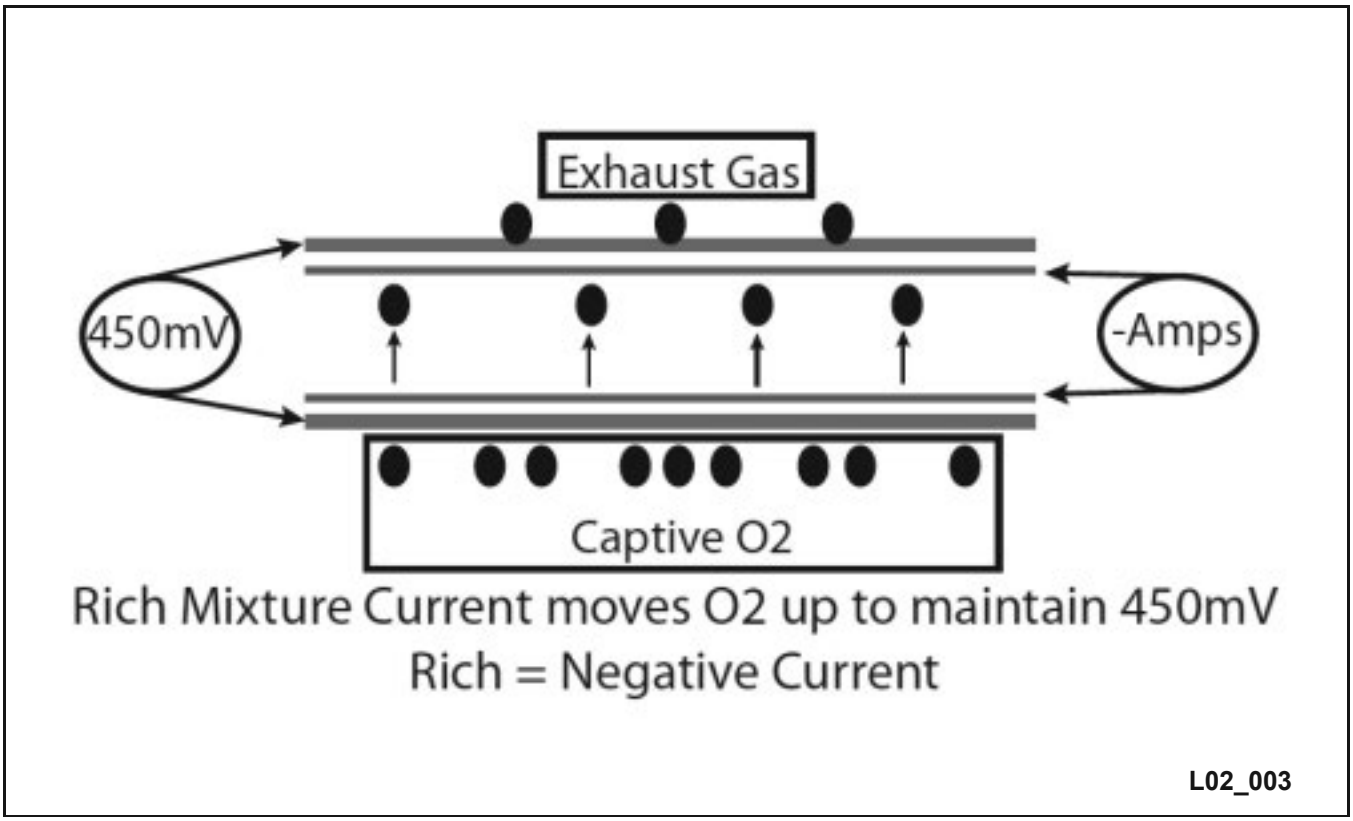

Figure 65 Rich Air/Fuel Ratio Exhaust Gas

The exhaust flow from a rich air/fuel ratio will have a relatively low oxygen content in the detection cavity. When this is the case, current will be pumped from the Ip- (common bias O2 Return circuit) to the Ip+ Positive Pumping Current Control circuit electrode. The pumping element will move oxygen into the detection cavity. The oxygen is removed from the exhaust flow through a porous layer and pumped into the detection cavity.

The scan tool will read a negative pumping current when the condition is rich. You can also measure this amperage using a multimeter and Mopar special tool 10367, Wideband O2 Sensor Diagnostic Adapter and monitor the amperage on the positive pumping current control circuit

Because the pumping layer works very quickly, the sensing layer voltage (O2 Signal circuit) should remain at or near 0.450 volts, even when the air/fuel ratio is rich.

Wide Band Sensor Schematic

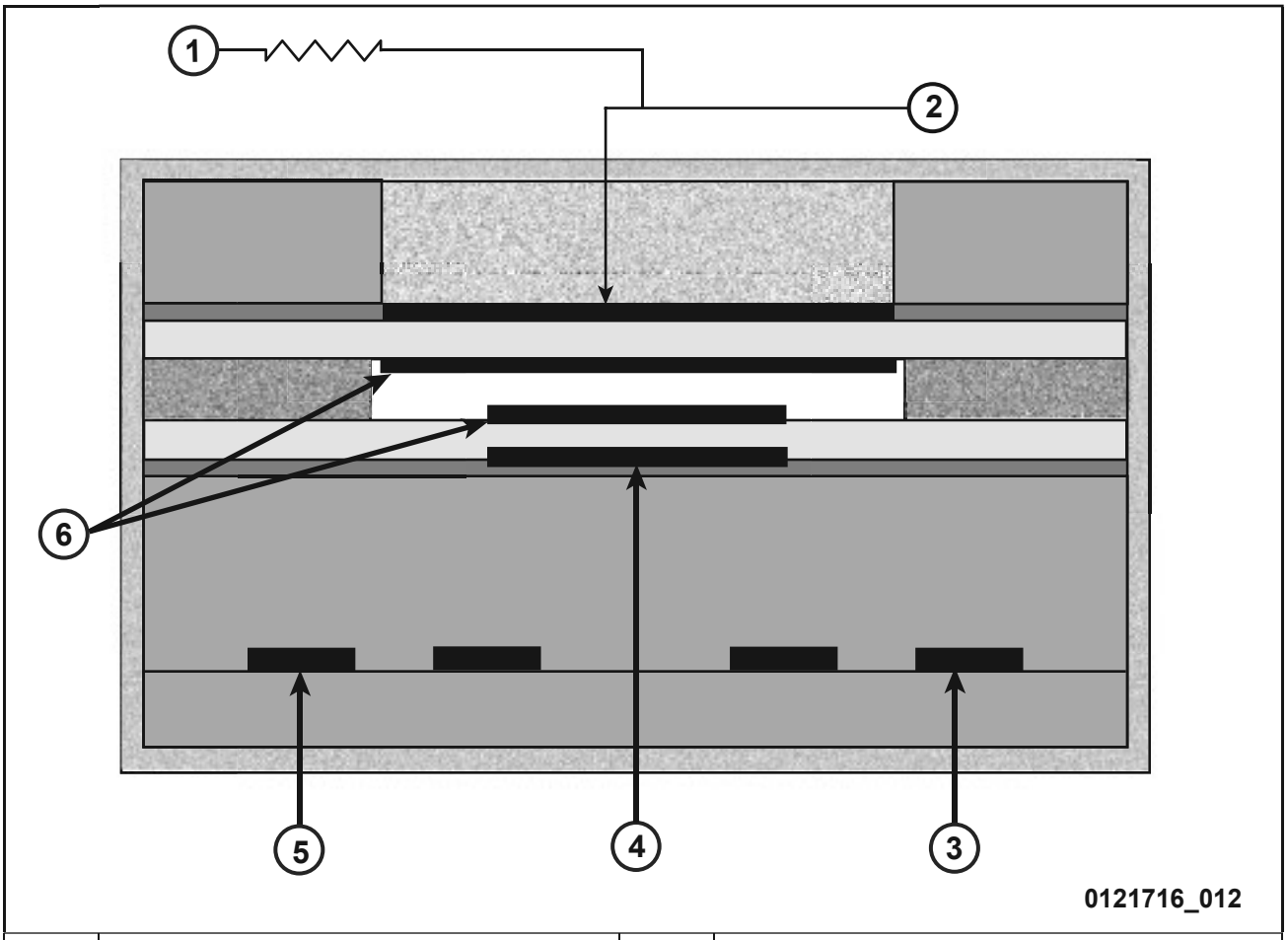

1	Compensation Resistor pump cell current trim	4	Vs+ Oxygen Sensor Signal
2	Ip+ Positive (Pumping) Current Control	5	O2 Heater (+)
3	O2 Heater (-)	6	O2 Return (Ip- and Vs- common bias)

Figure 66 Wide Band Sensor Schematic

Refer to the service wiring information for pin designations for the circuit functions called out above. The 6 and 8 pin connectors of the pumping oxygen sensor are mostly conventional. The O2 return circuit provides a common bias supply to both the sensing element and the pumping element. Call outs 1 and 2 reference the oxygen control pumping current circuits.

Oxygen Sensor Voltage and Amperage Measurements

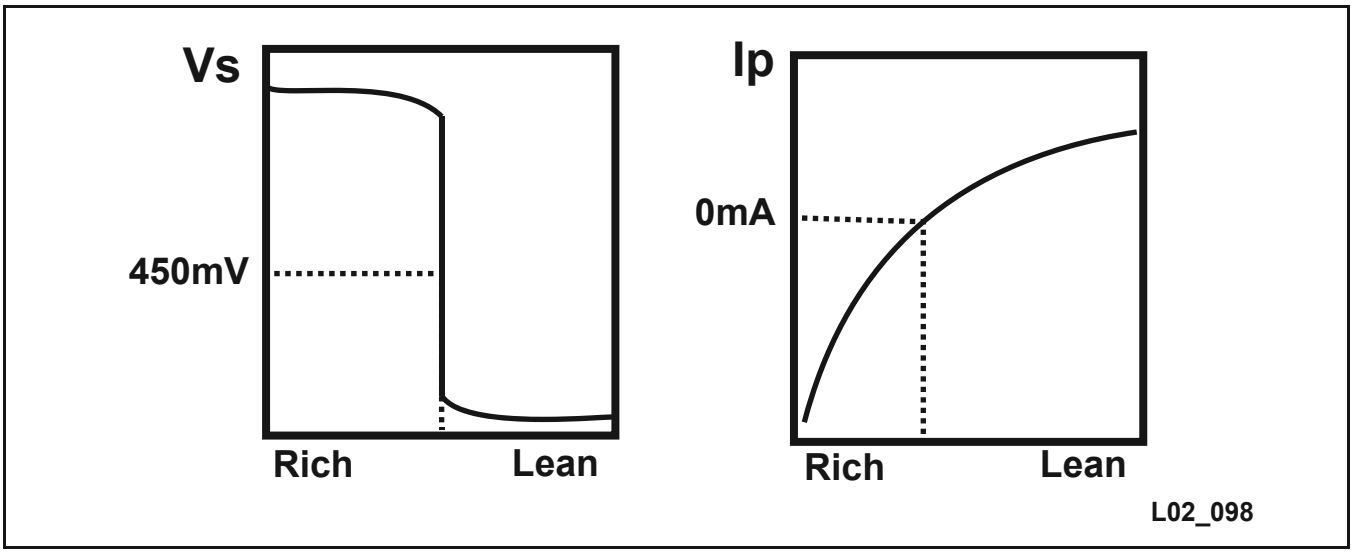

Figure 67 Oxygen Sensor Switching

The oxygen sensor switches resistance extremely rapidly, too quickly to be quantified. Therefore, it is considered a switching sensor, and the input from the sensor is used to switch the current to the pumping element.

Table 9 Oxygen Sensor Technical Specifications

Heater Supply Voltage	12V
Heater Resistance	2.5Ω–4.0Ω @ 25 °C (77 °F)
Exhaust Temperature Range	750–950 °C (1382–1742 °F)
Desired Heater Duty Cycle Frequency Range	10 – 30Hz
Activation Time	8 seconds
Electrical Connectors	6 or 8 pins

The value of the measurement chamber is typically 450 mV and pumping current varies from positive to negative amperage.

CAUTION: Carefully handle the oxygen sensor to prevent damage. The ceramic substrate can be cracked by hard impacts. Never drop an oxygen sensor.

Wideband O2 Sensor Diagnostics

Figure 68 Mopar Special Tool 10367

When diagnosing suspected faulty wideband O2 Sensors or the related circuits, it's important to use Mopar special tool 10367, Wideband O2 Sensor Diagnostic Adapter. This kit comes with a breakout box and a wire harness adapter. Adapter 10367-1 is required on 6-pin O2 Sensor harness connectors Adapter 10367-3, is required on 8-pin O2 sensor harness connectors. Refer to service information to verify which O2 Sensor you are diagnosing.

NOTE: The 10367-3 harness adapter uses an 8-pin connector and the breakout box only has room for 6 circuits. The 8-pin connector only contains 6 circuits, pins 4 and 6 are not used. The 10367 breakout box circuit numbering doesn't match up to the actual terminals of the O2 Sensor harness Pins 1, 2, and 3 on the breakout box match up to the 8-pin O2 Sensors pins 1, 2, and 3 exactly. Currently pins 4 of the breakout box connect to pin 5 of the O2 Sensor. Pins 5 of the breakout box connect to pin 6 of the O2 Sensor and pins 6 of the breakout box are connected to pin 7 of the O2 Sensor. With the breakout box connected in series you can now safely test on O2 Sensor without back probing any of the circuits.

Notes:

Notes:

ACTIVITY 2 DIAGNOSE SENSOR INPUTS (CONTINUED)

TASK FOUR: OXYGEN SENSOR CIRCUIT DIAGNOSIS (NARROW BAND)

In this activity, you will learn about the narrow band oxygen sensor operation and diagnosis and the operation of the oxygen sensor heater.

Using service information, your Student Workbook, and the classroom vehicle, answer the following questions about the oxygen sensor operation and diagnosis.

Record your answers below.

Voltage Measurements with Diagnostic Adapter

Using TechCONNECT, identify the oxygen sensor wires and pins to use while testing its circuits for proper operation.

With the engine cold, connect the digital multimeter to the proper cavities of the sensor you have looked up, start the engine, and monitor the oxygen sensor circuits.

1. What is the voltage reading at the oxygen sensor heater feed?

_____

2. What is the voltage reading at the oxygen sensor heater ground control circuit?

_____

3. What is the voltage reading at the signal wire?

_____

4. Short the signal wire to sensor ground. What did the oxygen sensor voltage do?

_____

5. Short the signal wire to vehicle ground. What did the oxygen sensor voltage do?

_____

TASK FIVE: LINEAR AIR/FUEL SENSOR DIAGNOSIS (WIDE BAND)

In this activity, you will understand the wide band oxygen sensor operation.

Using service information, your Student Workbook, and the classroom vehicle, answer the following questions about the operation of the wide band oxygen sensor operation and diagnosis.

To accurately diagnose the oxygen sensor used on the 1.4-liter engines, you must use special tool 10367, Wideband O2 Sensor Diagnostic Adapter. Using service information, perform the following tests on the wide band oxygen sensor.

Record your answers below.

Voltage Measurements with Diagnostic Adapter

Disconnect the upstream O2 Sensor and install the special tool 10367, Wideband O2 Sensor Diagnostic Adapter. Make sure all of the the shorting bars are istalled in the breakout box.

1. On the table below, identify and fill in the six pins of the connector.

Pin #	Circuit Function	Measurement	Pin #	Circuit Function	Measurement
1			4		
2			5		
3			6		

2. Locate the heater control pin test point on the diagnostic adapter. Install the multimeter test leads to test the heater voltage. Turn the key to the RUN position, and observe the voltage.

   a. What happens to the voltage reading on the heater control circuit? Why?

---

3. Locate the common bias voltage pin test point on the diagnostic adapter. Install the multimeter test leads to test the voltage to chassis ground. Turn the key to the RUN position, and observe the voltage. Now start the engine and maintain 2500 RPM. Observe the voltage.

   a. What voltage is present on the common bias circuit? How is this different than other vehicles?

---

4. Install the multimeter test lead to test the oxygen sensor 1/1 signal voltage. Maintaining 2500 RPM, observe the voltage.

   a. What voltage is present on the oxygen sensor 1/1 signal circuit? How is this different than a narrow band oxygen sensor? Is the reading stable or does it change?

---

5. Install the multimeter test leads to test the pumping cell current trim voltage. Maintaining 2500 RPM, observe the voltage.

   a. What voltage is present on the pumping current trim control circuit? How does this reading resemble a narrow band oxygen sensor? Is the reading stable or does it change?

---

6. Change the ground lead for the multimeter test lead to the common bias pin to test the pumping oxygen positive current control voltage referenced to the common bias. Repeat step 5.

   a. What voltage is present on the pumping current trim control circuit? How does this reading resemble a narrow band oxygen sensor? Is the reading stable or does it change?

Restore the vehicle and clear any codes as necessary.

Notes:

LESSON 3 PCM OUTPUTS

PCM OUTPUTS

PCMs may use either high-side or low-side drivers to control output devices. A driver is a solid state transistor. A low-side driver (LSD) controls the ground circuit of a device. A high-side driver (HSD) controls the power supply of a device.

Low-side Driver Operation

A low-side driver controls the ground circuit of a device.

Low-side-controlled Devices

The PCM contains drivers to control various low-current devices such as relays and solenoids.

Typical low-side outputs:

- Double start override (starter) relay
- Fuel pump relay
- EVAP solenoids
- Alternator
- Low-speed and high-speed radiator fans
- ASD/Main relay
- A/C clutch relay
- A/C variable displacement compressor control solenoid
- Vacuum solenoids
- Injectors
- Ignition coils
- Throttle blade (ETC)
- Oxygen sensor heater
- Vacuum pump (not applicable on FIAT)

Low-side Output Control

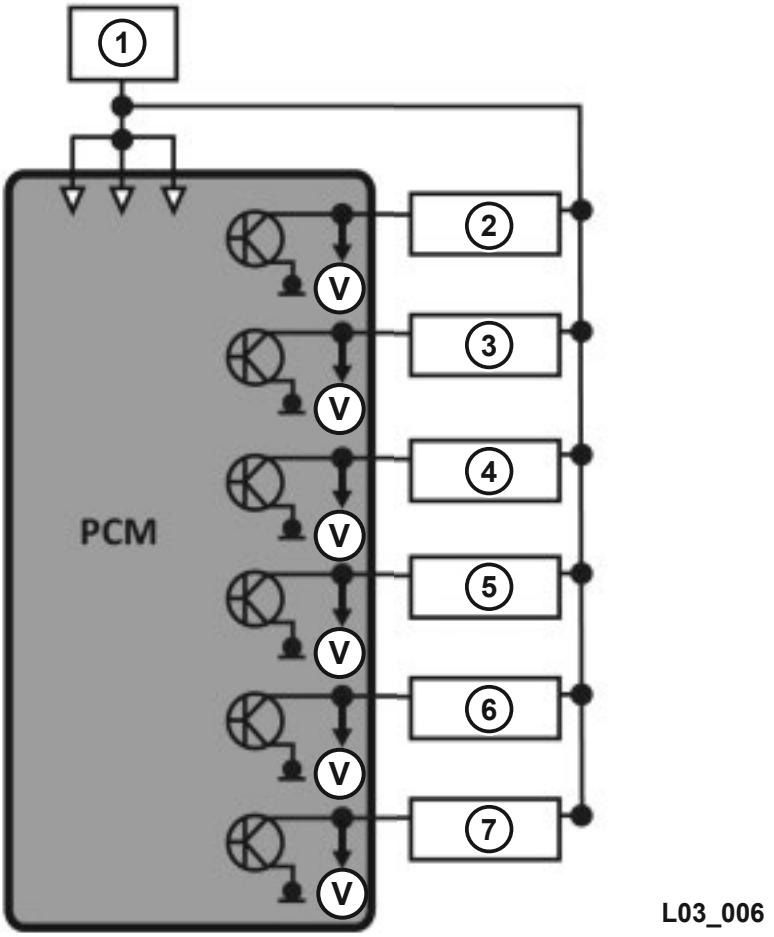

1	ASD/Main Relay	5	Injector #4
2	Injector #1	6	Injector #5
3	Injector #2	7	Injector #6
4	Injector #3		

Figure 69 Low-side Output Control

Low-side-controlled devices use a low-side driver. The PCM supplies a pulse-width-modulated (PWM) ground for the device. On most gas powered CDJR vehicles, the fuel injectors are supplied voltage via the ASD/Main relay. The ground is provided by the PCM over a low side PWM driver circuit. The PWM duty cycle regulates the injector pulse width.

Low Side Driver Diagnostics

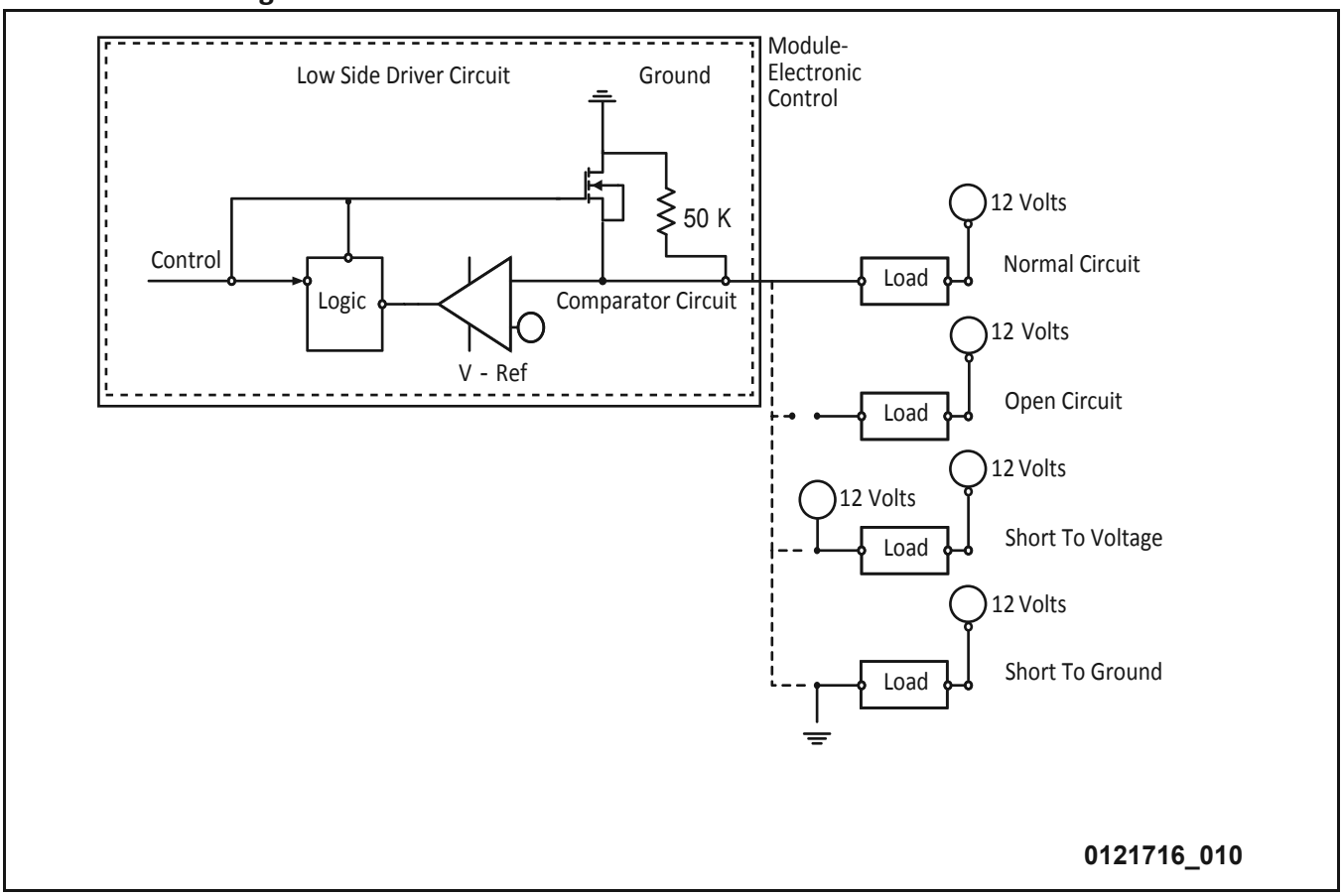

Figure 70 Low-side Driver Diagnostics

The PCM provides fault detection for the device, wiring, and internal driver. In the figure above, the PCM uses an internal 50K ohms pull down diagnostic resistor connected in series, a calibrated voltage reference (V-Ref), and a comparator circuit for fault detection purposes. When the electrical device is commanded off, the PCM monitors the voltage present on the comparator circuit (voltage high), indicating the circuit is complete which is measured against the V-Ref voltage.

- **Circuit Open and Circuit Low Detection:** The PCM monitors for an open circuit and short to ground when the driver switch or field-effect transistor (FET) is switched off. When switched off, the available voltage passes through the load and the 50K ohm internal pull down resistor. The voltage at the comparator circuit should be close to battery voltage since the majority of the voltage drop occurs through the diagnostic resistor. If the available voltage at the comparator is less than the V-Ref because of a short to ground or open, a fault is set. In this case the V-Ref is set to approximately battery voltage.
- **Circuit High Detection:** The PCM monitors for a short to voltage when the driver is switched on. When the driver is switched on providing a path to ground through the transistor, instead of the 50K ohm resistor, the available voltage should be pulled low, near zero volts since the comparator circuit is monitoring the ground side of the load. If the voltage on the comparator circuit is greater than the V-Ref, because of a short to voltage a fault is detected. In this case, V-Ref is set slightly above zero volts.

NOTE: **A load that has a resistance that is below manufacturer specification, or a second load device shorted to the low side driver circuit, can cause excessive current draw on the internal driver. The driver will be switched off to protect against overheating and damaging the driver. In this instance the Circuit High fault may be detected because the available voltage on the comparator circuit is above V-Ref.**

High-side-controlled Devices

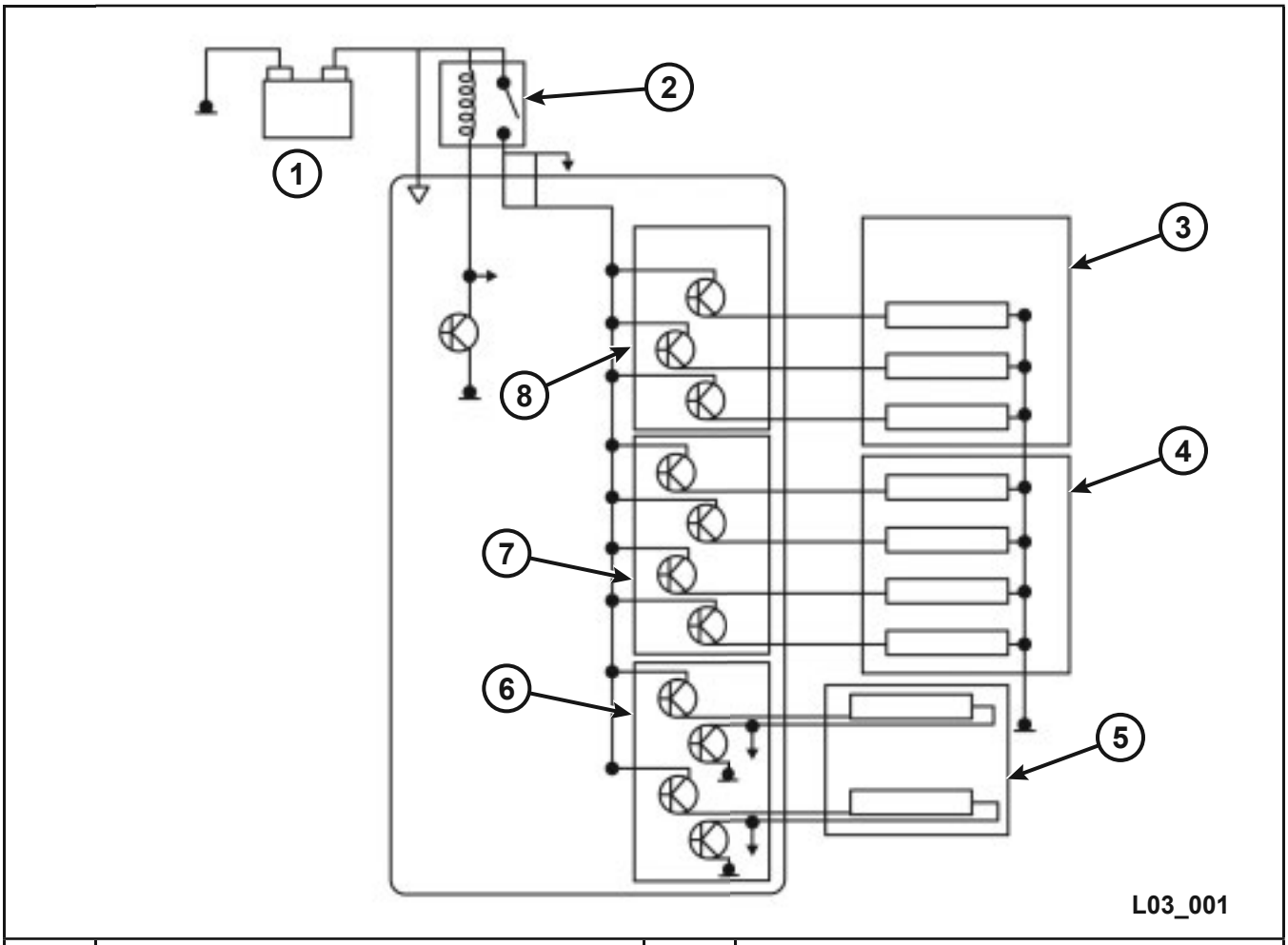

1	Battery	5	Components Group 3
2	ASD Relay	6	Driver 1
3	Components Group 1	7	Driver 2
4	Components Group 2	8	Driver 3

Figure 71 High-side Output Control

High-side-controlled devices use a high-side driver. The PCM supplies a pulse-width-modulated (PWM) power feed to the device. The pulse-width usually stays at a consistent frequency, for example: 100 Hz (cycles per second). The variable output is accomplished by changing the duty cycle, commonly known as the pulse duration. For example, the driver may operate at 100 Hz with an 80% duty cycle, positive trigger, meaning the on-pulse duration will be 80% of the cycle while the off-pulse duration is 20%.

PCM Outputs

In some instances, variable output devices, such as the proportional purge solenoid (PPS) have their ground connections made through the PCM, and power is supplied by the HSD. In these cases, the PCM is capable of monitoring the ground circuit to determine the position of the device.

The PCM high-side driver can control medium- and high-current outputs such as:

- Oxygen sensor heaters
- Electronic throttle control (ETC)
- Proportional purge solenoid (PPS)
- A/C clutch
- VCT solenoids
- VVT solenoids

High-side Driver Diagnostics

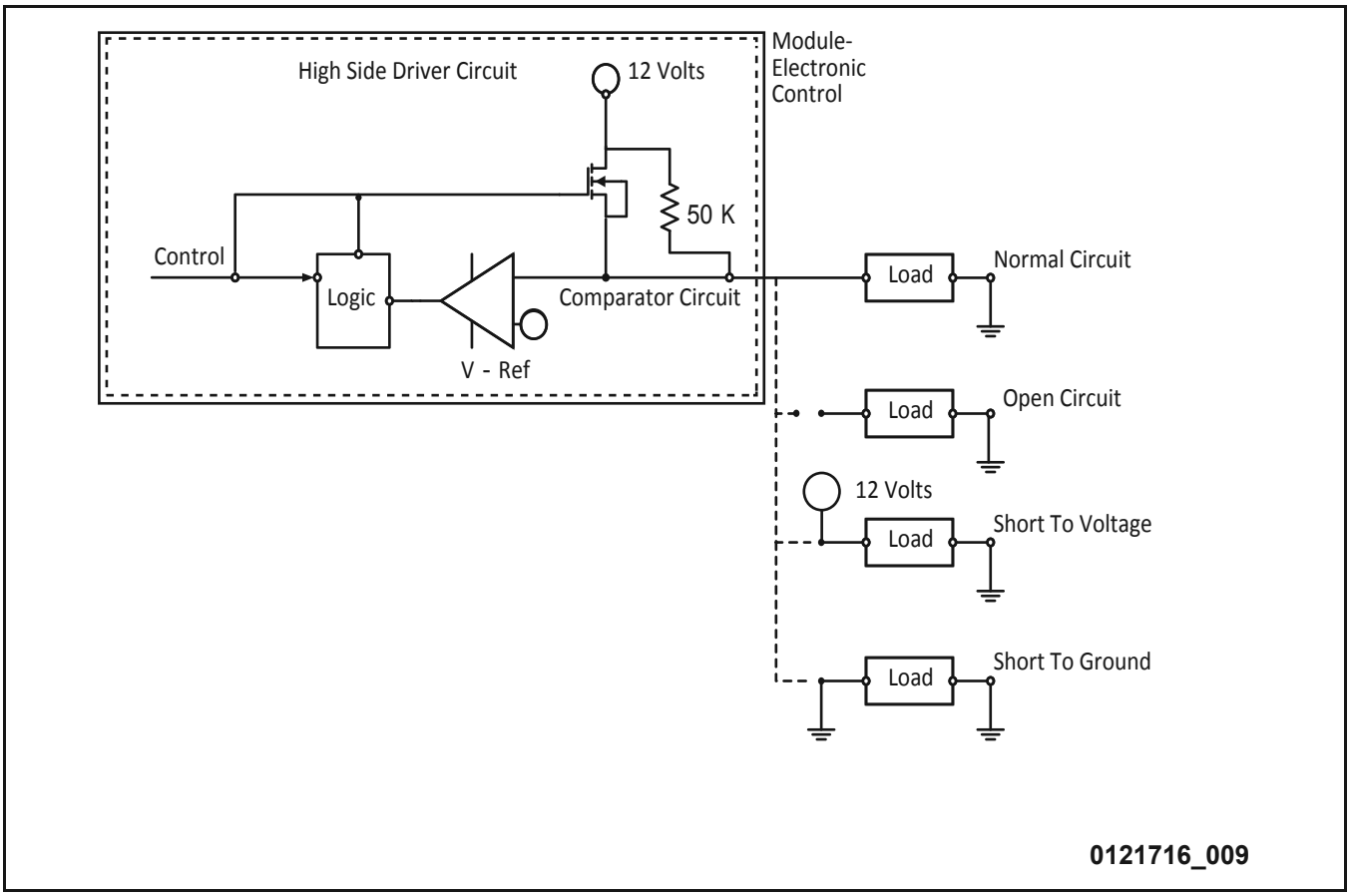

Figure 72 High-side Drive Diagnostics

The PCM provides fault detection for the device, wiring, and internal driver. In the figure above, the PCM uses an internal pull up diagnostic 50K ohm resistor, a calibrated reference voltage (V-Ref) and a comparator circuit for fault detection. High-side driver amperage is constantly monitored; when the PCM detects a higher-than-normal amperage, the PCM disables the HSD and a DTC is set. The circuit will typically remain disabled, even if the fault has been resolved, until the ignition key is cycled or the operator has turned the device off and back on again with no fault detected.

- **Circuit Open and Circuit High Detection:** The PCM monitors for an open circuit and short to voltage when the internal driver field-effect transistor (FET) is switched off. A small amount of amperage is provided to the device through the 50K ohm internal pull up diagnostic resistor connected in series with the load. This voltage is monitored between the pull up resistor and the load on the comparator circuit and compared to the V-Ref. If the resistance in the device or circuitry becomes too large (approaching an open) the voltage supply will increase on the comparator circuit and become greater than V-Ref and a fault is detected. A short to battery voltage will have the same effect.
- **Circuit Low Detection:** The PCM monitors for a short to ground when the internal driver field-effect transistor (FET) is switched on. When switched on, the voltage on the comparator circuit to the load should be close to the 12 volt supply voltage. A short to ground will pull the voltage at the comparator circuit below V-Ref and a circuit low fault is detected.

Power Relays

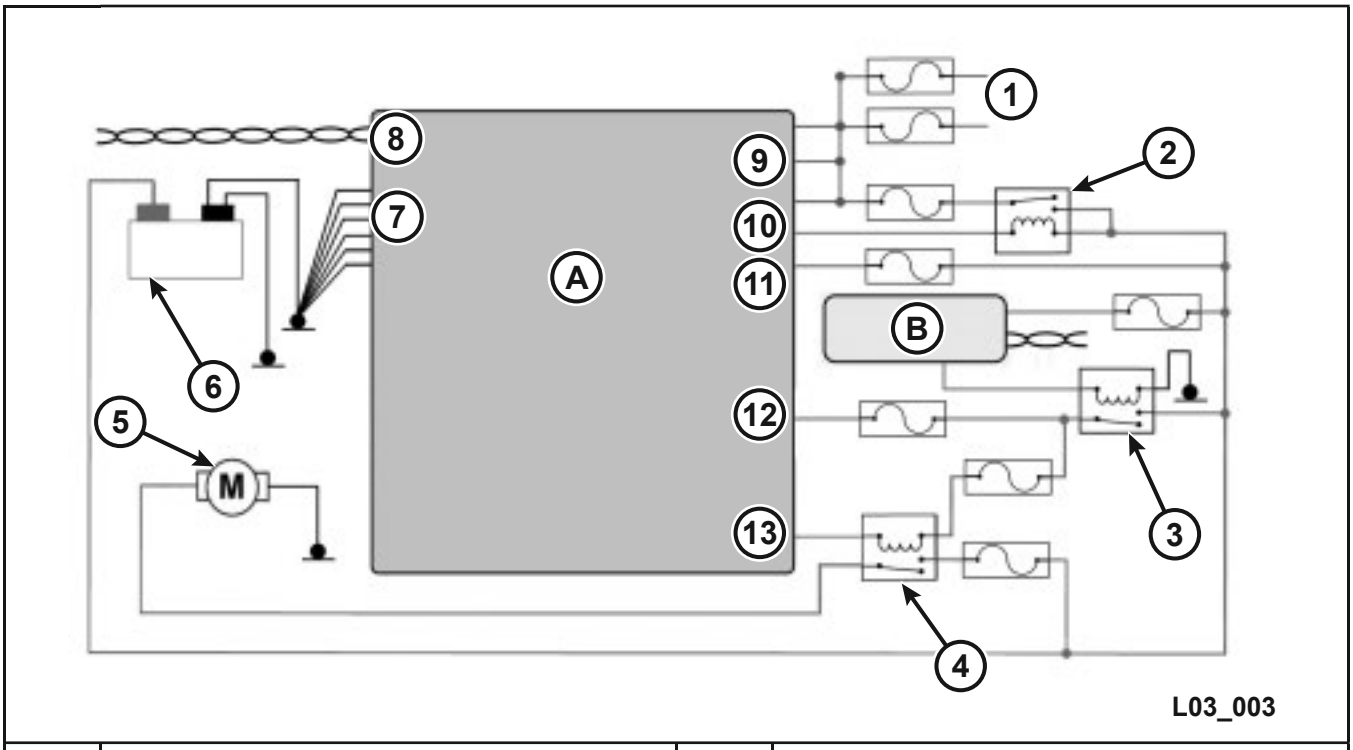

A	Powertrain Control Module	B	Body Control Module
1	Ignition Coil/Injector Power	8	CAN Communication
2	ASD Relay	9	ASD Circuits (3)
3	Ignition RUN/START Relay	10	ASD Relay LSD Control
4	Fuel Pump Relay	11	Direct Battery Feed
5	Fuel Pump	12	Ignition RUN/START Input
6	Battery	13	Fuel Pump Control
7	PCM Ground Circuits (6)		

Figure 73 PowerNet ASD Relay

PowerNet Automatic Shutdown (ASD) Relay

When energized, the ASD relay provides power to operate the injectors and ignition coils. The PCM monitors the sense circuit for diagnostic purposes.

The PCM energizes the ASD:

- For approximately 2 seconds during initial key ON cycle
- Whenever the rpm signal exceeds a certain rpm value

The ASD relay coil is fed battery voltage. The PCM provides the ground and monitors the desired ASD circuit. Consult service information for vehicle-specific information.

GPEC1 Main Relay

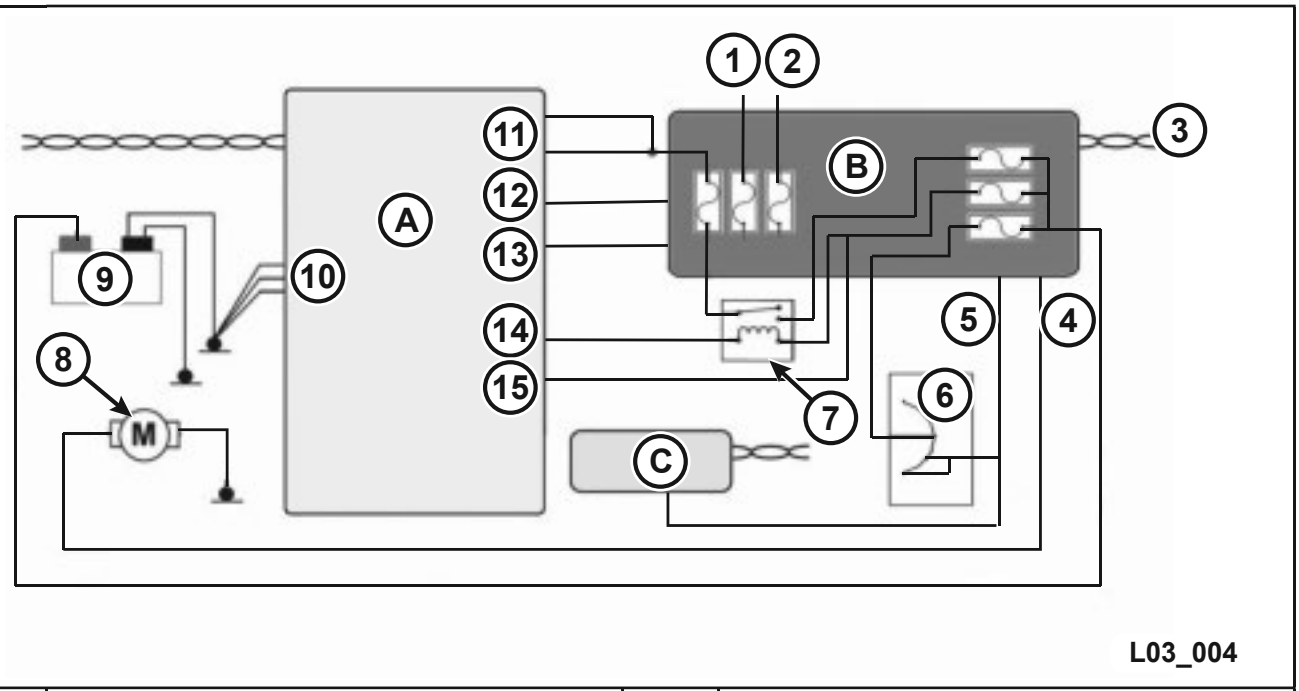

A	Powertrain Control Module	B	Totally Integrated Power Module
C	Wireless Control Module		
1	To Ignition Coils	9	Battery
2	To Fuel Injectors and VVT Solenoids	10	PCM Ground
3	CAN-C Communication	11	ASD Power to PCM
4	To Fuel Pump	12	Run/Start Input
5	Run/Start Input	13	Fuel Pump LSD Control
6	Ignition Switch	14	Main Relay LSD Control
7	Main Relay	15	Fused B+ Power to PCM
8	Fuel Pump		

Figure 74 GPEC1 Main Relay (2010 JS example)

The main relay is located under the hood, in a secondary power distribution box, with the radiator fan relays. The main relay supplies voltage to the ignition coils, fuel injectors, and high-side drivers similar to the ASD relay used on other applications. The main relay also provides the voltage to power-up the GPEC1, and it continues to stay energized as long as the ignition key is ON (unlike the ASD relay, which will time out after approximately 2 seconds unless engine rpm is present).

The main relay is energized by the PCM after a RUN/START signal is received by the TIPM. The signal may be sent to the TIPM by the wireless ignition node (WIN) or wireless control module (WCM) via a bus message. A hard-wired input may also be provided to the TIPM by the WIN or the ignition switch. The TIPM acknowledges the request and turns on a high-side driver. This supplies a voltage signal to activate the low-side driver within the PCM. The low-side driver energizes the main relay. This circuit design allows for remote starting the engine by use of the key FOB.

There is also a feedback circuit from the GPEC1 to the ground side of the main relay coil. This circuit allows the relay to remain energized for approximately 7 to 10 seconds after the vehicle is shut off. During this time, the GPEC1 performs various shutdown functions.

Reverse voltage protection for the GPEC1 is provided by the main relay. During a reverse voltage condition, the main relay is deactivated and does not provide power to the GPEC1.

Ignition Coil Control

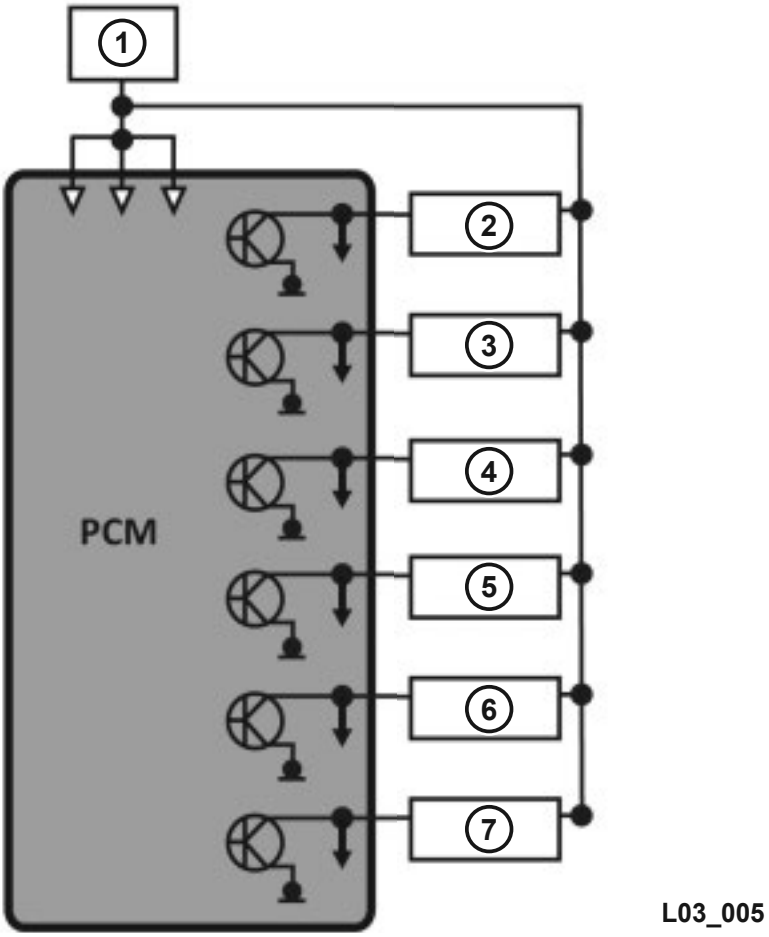

1	ASD Relay	5	Ignition Coil #4
2	Ignition Coil #1	6	Ignition Coil #5
3	Ignition Coil #2	7	Ignition Coil #6
4	Ignition Coil #3		

Figure 75 COP Ignition Coil Control Circuit

Most engines utilize coil-on-plug (COP) direct ignition systems. A few engines continue to use distributor-less ignition system (DIS). Spark timing and cylinder selection are controlled by the PCM.

With COP ignition, each spark plug typically fires once every two revolutions of the crankshaft. Engines with DIS fire each spark plug every revolution of the crankshaft. In both systems, a low-side driver controls each coil. Current flow is limited to 7 to 11 amps in low-current mode and 11 to 15.8 amps in high-current mode.

Ignition Coil Diagnosis

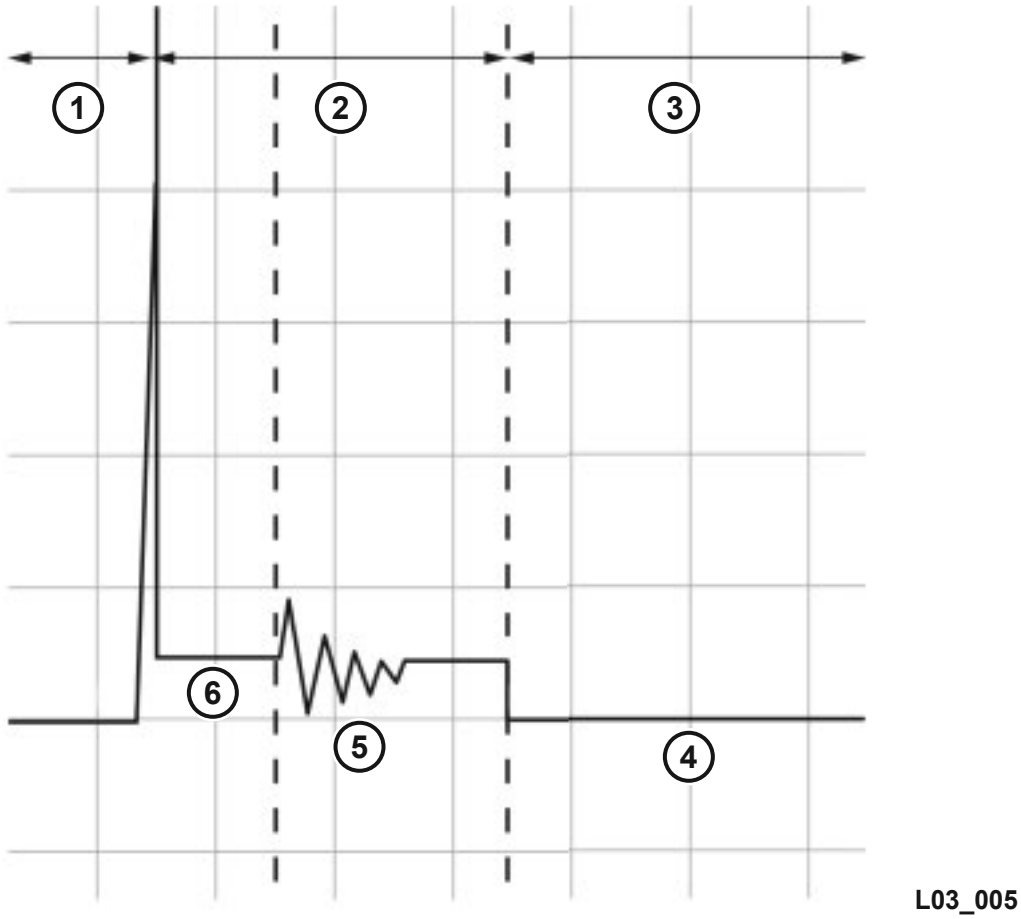

1	Firing Section	4	Coil Saturated
2	Intermediate Section	5	Coil Energy Dissipation
3	Dwell Section	6	Spark Duration

Figure 76 Ignition Scope Pattern

The PCM may monitor spark plug ionization (burn time) and may set a DTC if an out-of-range condition is detected. If the spark duration, indicated on the oscilloscope pattern as the spark line, is above or below specifications, a fault will be stored. This is accomplished by monitoring the coil's primary circuit current flow.

The major diagnostic steps are: measuring the coil's primary circuit resistance, verifying the coil has sufficient supply voltage, and verifying proper function of the coil driver circuit to the PCM. In most cases, these can be checked with a digital multimeter or an oscilloscope.

CAUTION: Do not short the coil driver circuit to disable a coil during testing; this may damage the driver circuit within the PCM.

Ignition coils have low impedance and can be easily damaged due to excessive current flow. If the coil driver circuit becomes shorted to ground, there is no current limiting, and coil damage can occur.

In vehicles with DIS, an open ignition secondary circuit, may affect one or both spark plugs in the circuit depending upon engine load. Under light load, only one spark plug may misfire, and the capacitive effect of the open circuit may fire the second plug. Under heavy load, both spark plugs may misfire.

WARNING:	**DURING DIAGNOSIS AND TESTING, IT IS IMPORTANT TO USE A SPARK TESTER WHEN TESTING FOR SPARK OR CYLINDER MISFIRE. DO NOT ALLOW COILS TO FIRE OPEN CIRCUIT.**

Fuel Injector Control

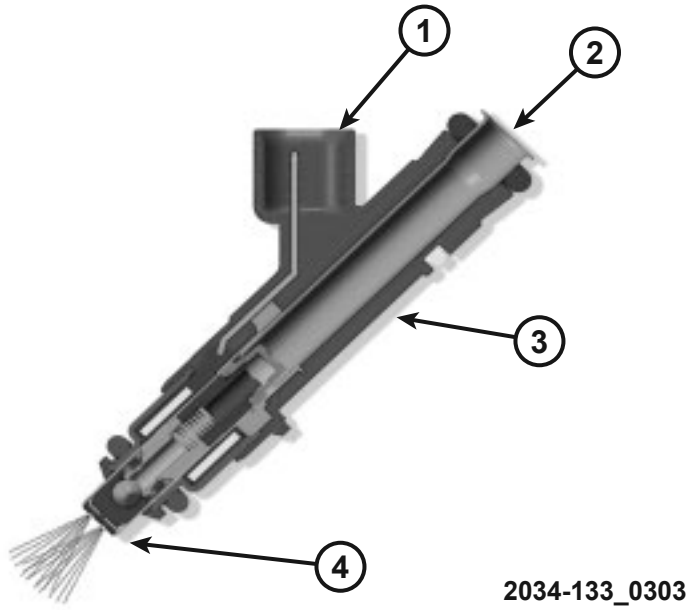

1	Injector Electrical Connector	3	Injector Body
2	Inlet with Screen	4	Spray Nozzle

Figure 77 Fuel Injector

All engines use 12-ohm, top feed injectors. The ASD relay or main relay supplies voltage to the injectors, and the PCM controls the injectors using a low-side, pulse-width-modulated driver. All injector circuits are clamped to a specified voltage to prevent damage from inductive kicks.

Fuel injectors are output-operated devices of the PCM. The PCM controls the on-time of the injector. When the fuel injector is energized, fuel is sprayed into the engine. The fuel injectors are electrical solenoids. The injector contains a pintle that closes off an orifice at the nozzle end.

When electric current is supplied to the injector, the armature and needle move a short distance against a spring, allowing fuel to flow out of the orifice. Because the fuel is under high pressure, a fine spray is developed. The spraying action atomizes the fuel, adding it to the air entering the combustion chamber.

The nozzle (outlet) ends of the injectors are positioned into openings in the intake manifold just above the intake valve ports of the cylinder head. The engine wiring harness connector for each fuel injector is equipped with an attached numerical tag (INJ 1, INJ 2, etc.). This is used to identify each fuel injector.

The injectors are energized individually in a sequential order by the powertrain control module (PCM). The PCM will adjust injector pulse-width by switching the ground path to each individual injector on and off. Injector pulse-width is the period of time that the injector is energized. The PCM will adjust injector pulse-width based on various inputs it receives. Battery voltage is supplied to the injectors through the ASD relay. The PCM determines injector pulse-width based on various inputs.

Fuel Injector Control Circuit

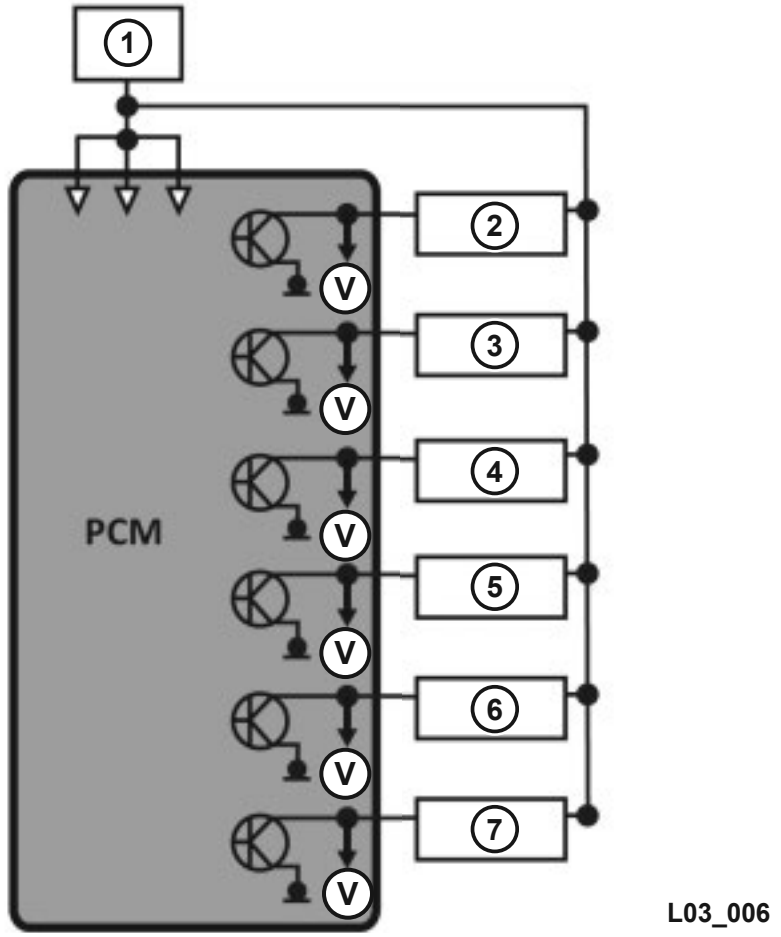

1	ASD Relay	5	Injector #4
2	Injector #1	6	Injector #5
3	Injector #2	7	Injector #6
4	Injector #3		

Figure 78 Fuel Injector Control Circuit

Fuel Injector Diagnostics

The PCM monitors the driver circuit for voltage when the ignition key is turned ON. The PCM expects to see voltage on the circuit. If not, a DTC will set immediately. The PCM also monitors the continuity of the circuit as well as the voltage spike (inductive kick) created by the collapse of the magnetic field in the injector coil. The inductive kick is typically above 60V. Any condition that reduces the maximum current flow to the injector or the magnitude of the kick can set a DTC of INJECTOR PEAK CURRENT NOT REACHED.

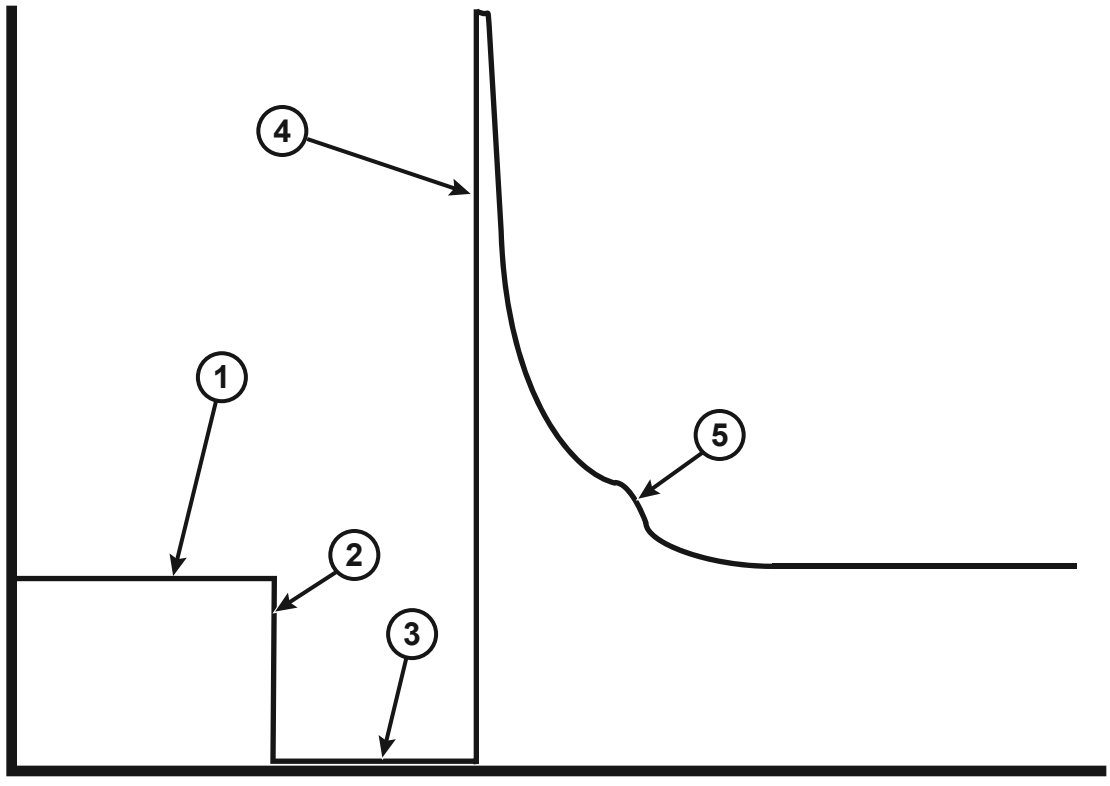

1	System voltage to injector	4	Inductive spike
2	LSD completes circuit to ground	5	Voltage dissipates to system voltage, the bump indicates injector pintle closing
3	Injector pintle opens causing a voltage drop across the injector wiring		

Figure 79 Typical LSD Controlled Fuel Injector Scope Pattern

Fuel Injector Clips

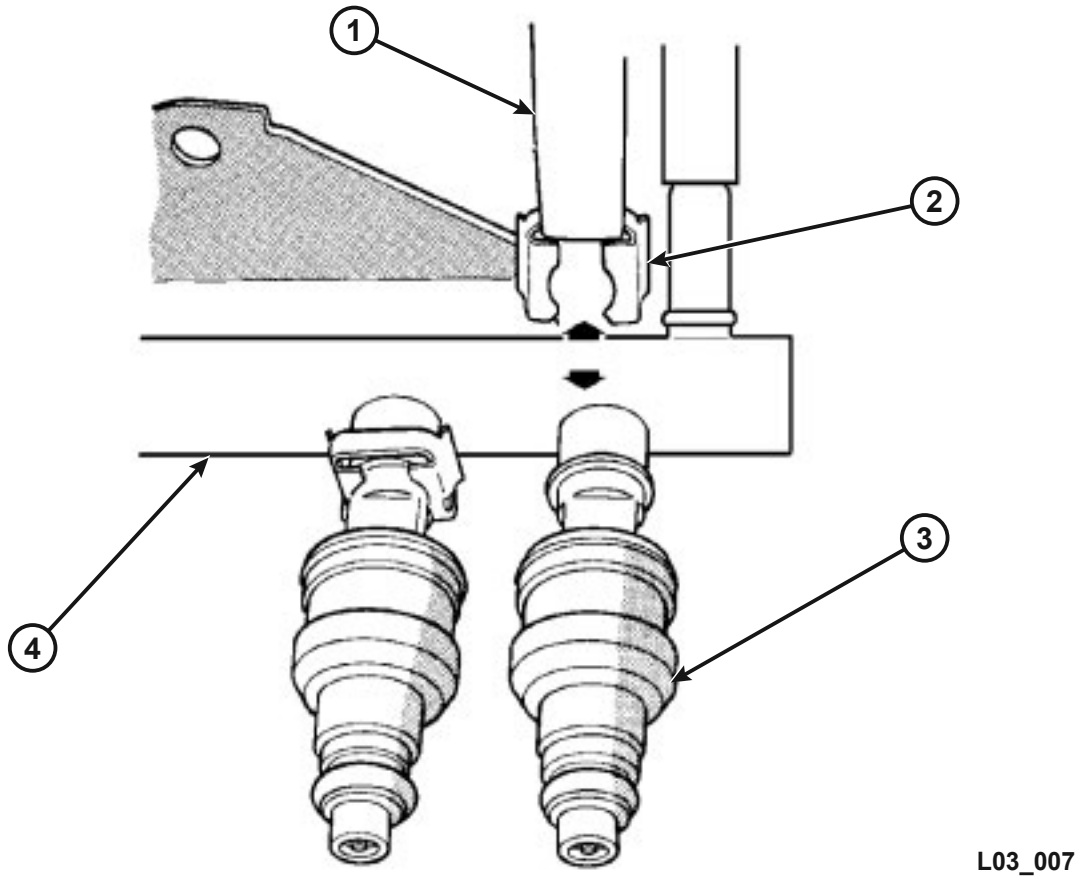

1	Pliers	3	Injector
2	Fuel Injector Rail Clip	4	Fuel Injector Rail

Figure 80 Fuel Injector Clips

WARNING:	**FUEL SYSTEM PRESSURE MUST BE RELEASED BEFORE SERVICING CERTAIN FUEL SYSTEM COMPONENTS. ALWAYS FOLLOW PROCEDURES IN SERVICE INFORMATION. SERVICE VEHICLES AND FUEL SYSTEM COMPONENTS IN WELL VENTILATED AREAS. AVOID SPARKS, FLAMES, AND OTHER IGNITION SOURCES. NEVER SMOKE WHILE SERVICING THE VEHICLE'S FUEL SYSTEM.**
WARNING:	**FUEL INJECTOR CLIPS ARE FOR ASSEMBLY PURPOSES. THE FUEL RAIL SHOULD NOT BE PRESSURIZED WHEN CLIPS ARE NOT PROPERLY INSTALLED ON THE FUEL RAIL.**

Fuel Pump Control Module

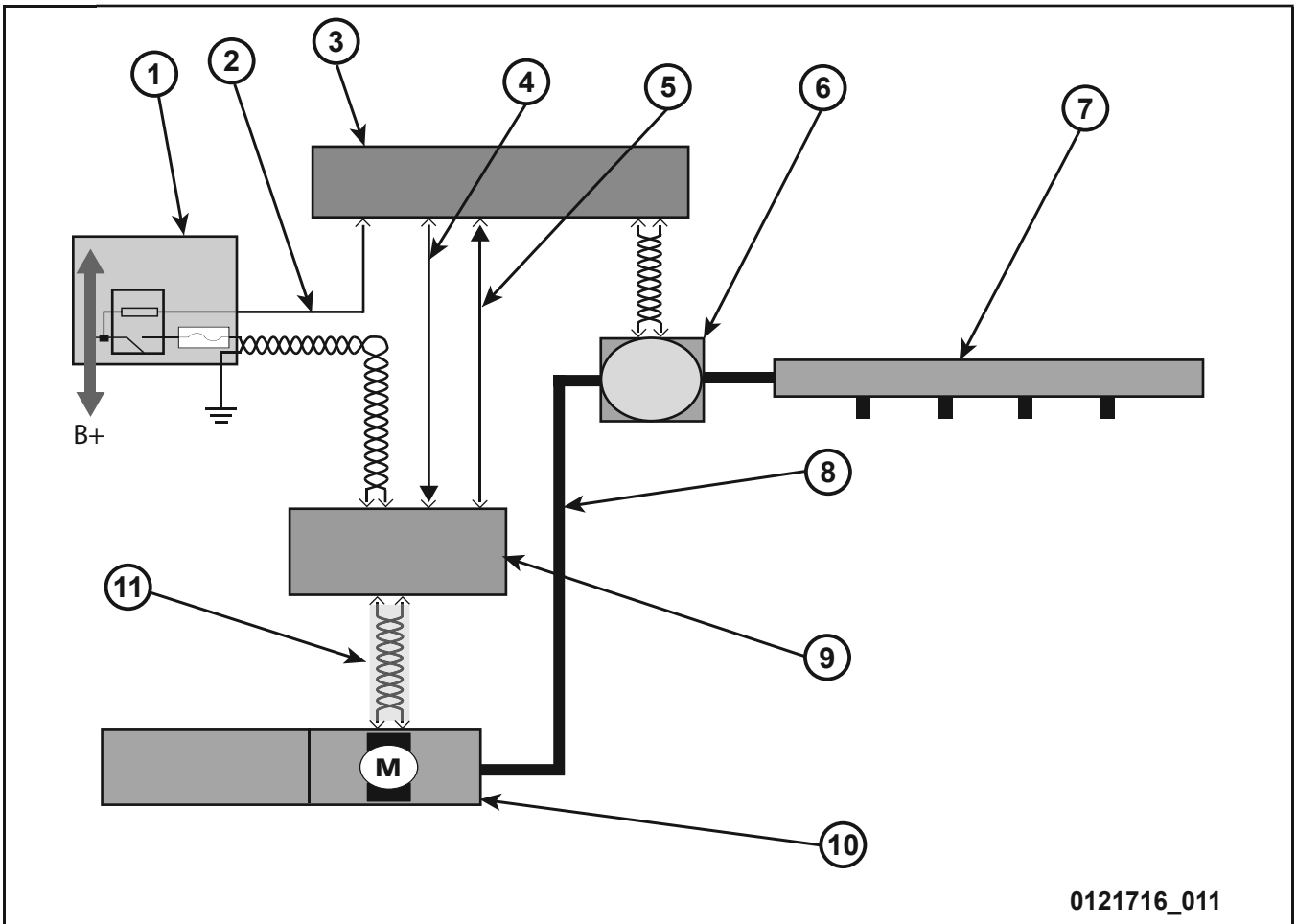

1	PDC/Fuel Pump Relay	2	Fuel Pump Relay Control (low side driver)
3	Powertrain Control Module (PCM)	4	FPCM PWM Control (PCM output)
5	FPCM PWM Feedback (PCM input)	6	Fuel Rail Pressure Sensor
7	Fuel Rail/Fuel Injectors	8	Fuel Line
9	Fuel Pump Control Module (FPCM)	10	Fuel Tank/Fuel Pump
11	Fuel Pump PWM control circuits (shielded)		

Figure 81 Fuel Pump Control System

A pulse-width modulated fuel pump operates only at the level required by the engines demand. This improves vehicle efficiency by cutting down on the electrical energy used, and increases the life of the fuel pump because it isn't on all the time resulting in the fuel economy improvement.

Variable speed fuel pump system is a closed loop system, utilizing an input voltage from the fuel rail pressure sensor (FRPS) to regulate fuel pressure. The PCM compares the FRPS reading to the desired set pressure and sends a pulse-width control signal to the fuel pump control module (FPCM) which in turn controls the fuel pump operation. The pump controller operates the pump in a continuously variable range from 10% to 100% of its capacity, depending on the engine needs.

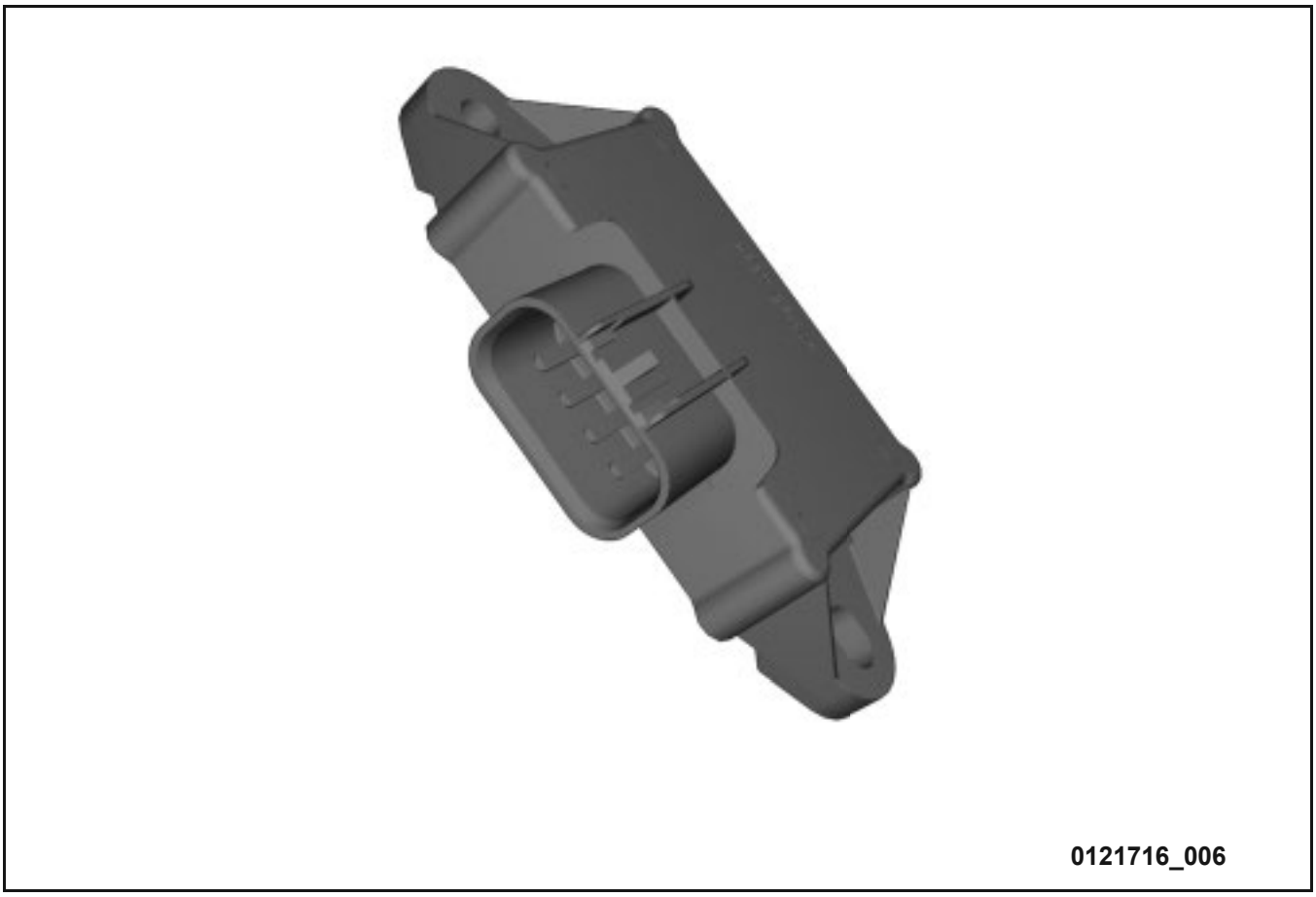

Figure 82 Fuel Pump Control Module

The fuel pump input voltage from the fuel pump control module is PWM at a frequency of 20KHz in order to adjust its output pressure to any desired level. The average power delivered to the pump is proportional to the applied duty cycle. Since pressure regulation is based on the output pressure of the pump, the regulation scheme can compensate for any battery voltage variations.

PCM Outputs

All software for OBD diagnostics and pressure regulation algorithms are contained in the PCM. PCM PWM Control operating ranges:

- 11% to 89% is normal operation
- 0% to 11% indicates a short to ground
- 90% to 100% indicates either an open or short to battery voltage

The FPCM shall be capable of outputting a PWM feedback signal identifying the module status to the PCM. When the FPCM detects a failure it will relay diagnostic information to the PCM via the FPCM PWM feedback signal circuit. A feedback signal of 50% is a normal signal.

During pressure sensor failures, or other failures, the system software is programmed to run the fuel pump at 100% duty cycle voltage and the mechanical regulator in the fuel delivery will regulate the pressure to 430 kpa (62 psi).

Fuel Pump Control Module Diagnostics

FAILURE MODE SYSTEM BEHAVIOR				
Pcode	Failure Mode	Condition	FPCM Diagnostic Feedback Signal (PWM%)	FPCM action to control fuel pump
P025A	FPCM PWM control circuit open, short to ground, or short to Vbatt	Open or short present for approximately two seconds	20%	Last known value (Timer start) Then 100% duty cycle after timer expires
	Invalid FPCM PWM control from the PCM	≤8% or ≥92% for approximately two seconds	20%	Try 50% power output for calibrated second, then shutdown output
	Invalid FPCM PWM control from the PCM	≤95% or ≥105% for approximately two seconds	25%	Last known value (Timer start) Then 100% duty cycle after timer expires
P025B	Output driver self-shutdown	Output driver temperature ≥130 deg C for approximately two seconds	60%	Try 50% power output, then shutdown
P025C	System under-voltage	Battery feed ≤ 6 volts	40%	100%
P025D	System over-voltage	Battery feed ≥16 volts	45%	React to PCM request
P0628	FPCM Output Failure	Short to ground	80%	React to PCM request
P0629	FPCM Output Failure	Short to battery	70%	Try 50% power output for calibrated time, then shutdown output
P064A	Fuel Pump driver over Current	Output current exceeds 15 Amps for 2 seconds	30%	React to PCM request
P1205 U0109	FPCM Micro internal fault	Loses the capability to detect short circuits, output state, overvoltage and thermal runaway	85%	Continue to run in normal mode; run fuel pump at duty cycle commanded by PCM
P1206	FPCM Output Failure	Open Circuit	75%	React to PCM request
PC109	FPCM Feedback Signal to PCM Electrical Malfunction	PCM detects electrical malfunction from feedback signal from FPCM	100%	React to PCM request
N/A	FPCM PWM feedback normal operation	Normal operation	50%	React to PCM request

ELECTRONIC THROTTLE CONTROL (ETC) SYSTEM

1	ETC Throttlebody

Figure 83 ETC Throttlebody

The ETC throttlebody houses the throttle plate, electric actuator motor, dual throttle position sensors, gears, and a spring.

The throttle actuator motor is controlled by a duty-cycle signal from the PCM. This is called ETC directional duty cycle. A concentric clock spring works to close the throttle plate when it is opened beyond a nearly-closed position. If electric power is lost, the spring will close the throttle to this default position. The spring also tries to open the throttle plate when it is fully closed.

Motor Polarity Throttle Opening

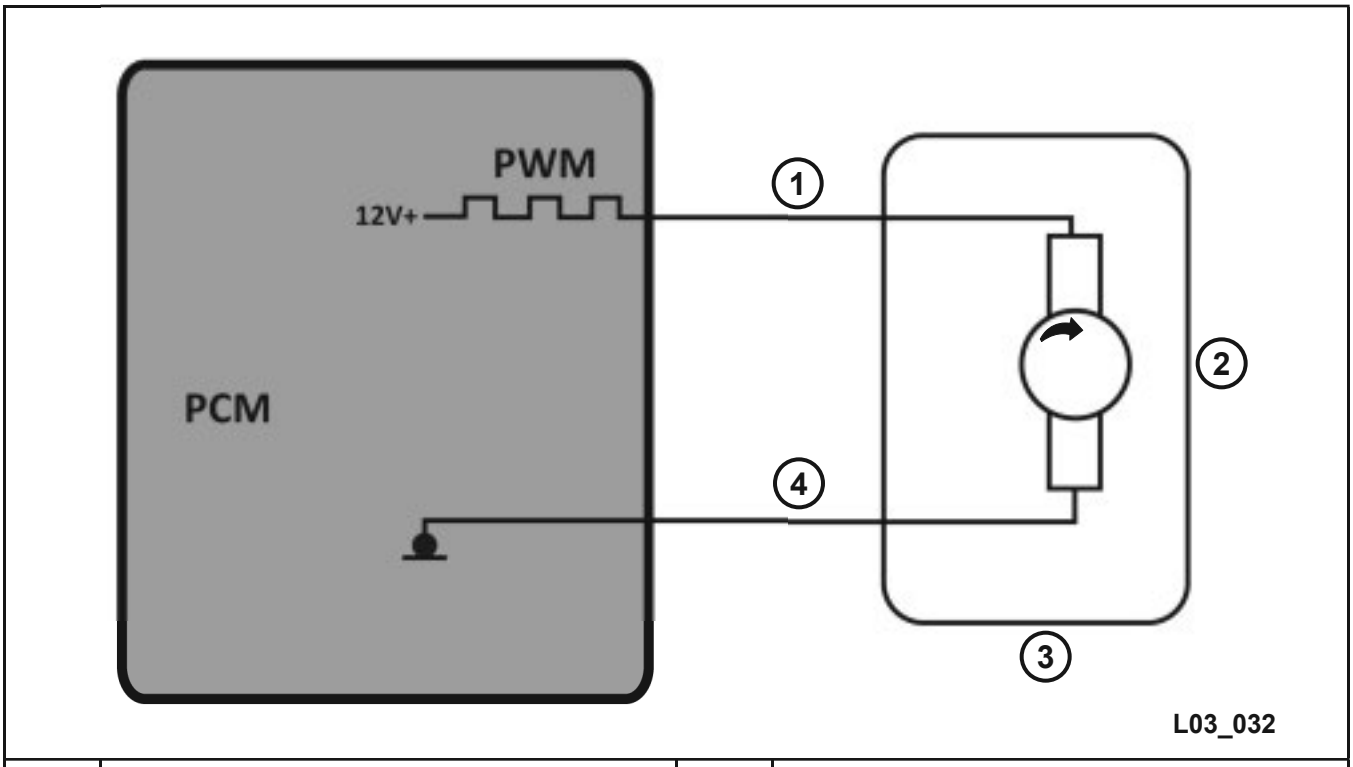

1	Pin 5 of throttlebody connector	3	ETC Throttlebody
2	Throttle Opening	4	Pin 3 of throttlebody connector

Figure 84 ETC Motor Polarity with Throttle Opening

The motor circuit reverses polarity to drive the throttle plate either open or closed. In the figure above, Pin 5 is the pulse-width-modulated side of the motor circuit . The motor circuit is completed through pin 3. Most of the time, circuit polarity causes the actuator motor to either open the throttle plate or hold the throttle plate open against spring tension. To do this, pin 3 is grounded and pin 5 is powered. To reverse the motor and rapidly close the throttle, the circuit reverses polarity. Pin 3 supplies 12V and pin 5 is grounded. Regardless of polarity, the motor circuit is always PWM on pin 5.

Motor Polarity Throttle Closing

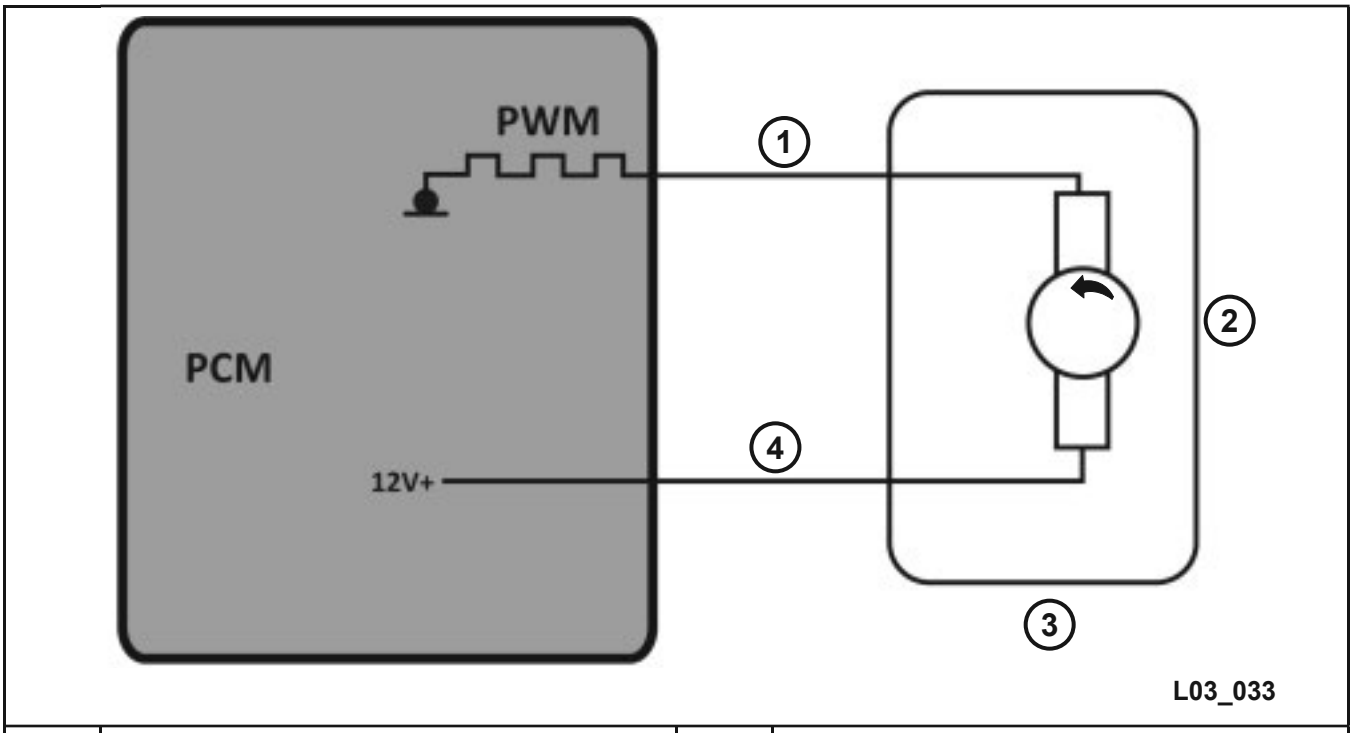

1	Pin 5 of throttlebody connector	3	ETC Throttlebody
2	Throttle Opening	4	Pin 3 of throttlebody connector

Figure 85 ETC Motor Polarity with Throttle Closing

ETC Response to Normal and Abnormal Conditions

The PCM looks at the accelerator pedal sensor signals (and many other inputs) and determines throttle plate position. If the signals are within range, then the driver will get the requested torque. If not, then the PCM will take some other course of action (such as reduced power, power-free, and zero rpm).

Starting a Vehicle with ETC

Starter engagement may be delayed briefly at every start-up while the PCM conducts an ETC spring test. The throttle plate is quickly driven open, then completely closed. The delay is approximately 1 second, and the driver may or may not notice this delay. On some applications, the delay is more noticeable than on others. Throttle plate movement can make noises that are unfamiliar to the driver. The throttle plate has a full range of travel that is greater than the normal operating range.

ETC Throttle Plate Stops

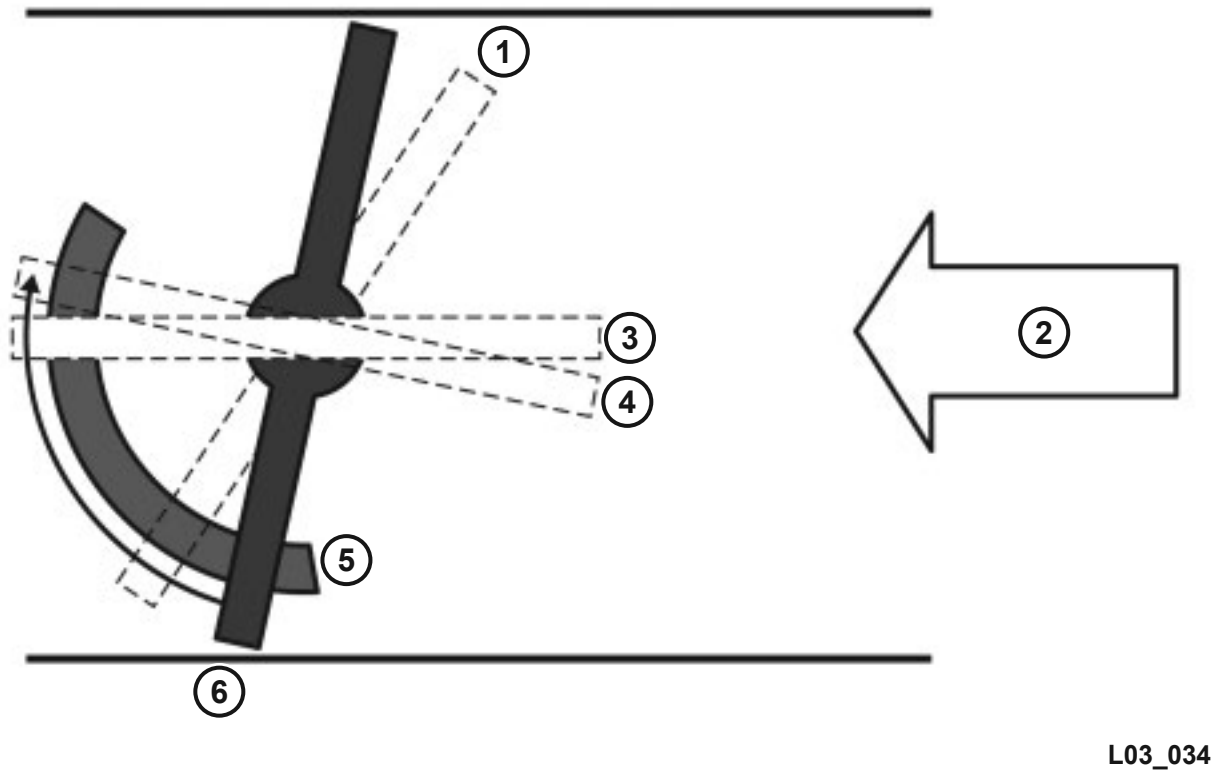

1	Mechanical Limp-home Position (default)	4	Upper Mechanical Stop
2	Airflow	5	Position Sensor Range
3	Wide Open Throttle	6	Lower Mechanical Stop

Figure 86 ETC Throttle Plate Stops

This start-up delay may be noticed only if the driver goes directly from the lock position to the start position. In rare cases, the delay can be up to 2 seconds before starter engagement is allowed. This will only happen if all of the following are true:

- The battery has been disconnected.
- Both engine coolant and ambient temperature sensors indicate that ice may be present.
- The ETC throttle's learned limp-in values do not match the actual limp-in values (this would most likely happen if the entire throttlebody assembly is replaced).

If the above conditions are all true, then the PCM will do an entire throttle plate range sweep (minimum to WOT and closed again) that takes place before starter engagement is allowed. This may last up to 2 seconds. The scan tool displays the mileage when the starter was last disabled with ETC STARTER INHIBIT: XXX. The PCM may decide to abort the ETC spring test if the key is turned rapidly to the START position.

ETC Warning Light

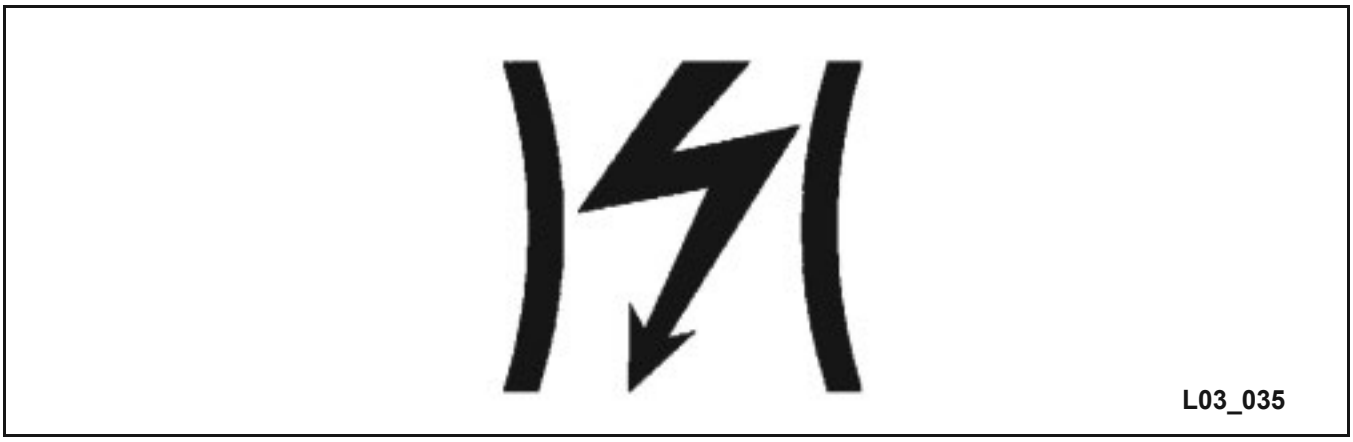

Figure 87 ETC Warning Light

Regardless of accelerator pedal position, the PCM has the ability to reduce maximum engine rpm. For example, on DR models with a 5.7 liter engine, in-gear, maximum rpm at WOT request is approximately 5900 rpm. If the WOT request is maintained, maximum rpm drops to approximately 5600 rpm. The in-neutral rev limiter holds rpm to approximately 3500 rpm.

NOTE: The throttle plate will not open with accelerator pedal input if the engine is not running, even with the key ON.

Fail-safe Mode

Loss of one input will cause the PCM to start the fail-safe mode. The ETC system will limit throttle opening, slow the response to the accelerator pedal, drop engine speed to idle with brake application, and disable the speed control function. A DTC will be set, and the ETC warning light will illuminate.

Limp-in mode

More serious faults will cause the system to enter the limp-in mode. In this mode, the ETC light flashes, a DTC sets, and the MIL illuminates. The engine will run, but the vehicle can be driven with severe restrictions. Speed control operation is not permitted. In the limp-in mode, accelerator pedal position has no effect on the throttle plate opening or engine speed. The engine runs at two different speeds, with engine speed controlled by the action of the brake pedal. When the brakes are applied, engine speed is controlled at approximately 700 rpm. With brakes released, engine speed slowly increases to 1200–1500 rpm. The PCM controls engine speed by controlling the ETC motor, spark timing, and fuel. If the PCM cannot control the throttle blade position, the PCM attempts to control rpm with spark timing and fuel.

Below are reasons for the ETC system to enter the limp-in mode:

- Low battery voltage
- ASD relay off
- ETC throttle adaptation routine limp-in learning
- PCM failure
- Auxiliary 5V supply failed (not primary)
- One throttle position sensor and the MAP sensor have failed
- Both throttle position sensors have failed
- ETC actuator motor failure
- Spring test open or close failure
- APP sensor internal signal failure
- One brake switch failure and one APP sensor failure

Notes:

ACTIVITY 3 DIAGNOSE PCM OUTPUTS

TASK ONE: ELECTRONIC THROTTLE CONTROL

On the classroom vehicle, perform the following checks and record the results of the test.

Locate the following ETC system components on the classroom vehicle.

- Accelerator pedal position (APP) sensor
- Electronic throttle control (ETC) body

1. What component or components control the idle speed control function?

Remove the air cleaner tube from the classroom vehicle to expose the ETC throttlebody assembly.

Lay the tube on the engine with the IAT connected. Crank the engine and closely observe the throttle plate. Be sure to observe all events as the key is turned from OFF to the START position.

WARNING:	**KEEP FINGERS AWAY FROM THE THROTTLE PLATE WHEN THE IGNITION IS ON. DO NOT OPEN THE THROTTLE PLATE MANUALLY FOR ANY REASON. ALWAYS USE THE wiTECH™ 2.0 THROTTLE FOLLOWER TEST TO OPEN THE THROTTLE PLATE.**

2. Describe the throttle plate action when turning the key to the ON position.

---

3. Describe the throttle plate action during the start sequence.

---

4. Did the engine begin to crank immediately when the ignition is cycled to the START position?

---

5. Using service information, locate the wiring schematic for the ETC throttlebody connector.

In the chart below, fill in the circuit number, wire colors, and circuit function.

ETC Connector Pins	Circuit #/Wire Color	Circuit Function

With the vehicle at idle and the scan tool connected, answer the following questions.

6. View the ETC directional duty cycle data value in graph mode with auto-fit. What is your average reading?

_____

7. Depress the accelerator slowly to 2000 rpm and then back to idle. What did the ETC directional duty cycle data value do?

_____

Turn the engine off.

Throttle Follower Test

With the ignition in the ON position, use the scan tool to perform the Throttle Follower Test.

8. Describe the change in TPS 1 sensor voltage as you open and close the throttle.

_____

Scan Tool Data	At Rest (Volts)	Fully Depressed (Volts)
APP1		
APP2		
TPS1		
TPS2		
TB Position		

Exit the test.

Navigate to the Data tab and select TB%, APP 1, and APP 2 values, and view them in graph mode.

9. What does the APP2 graph do intermittently?

_____

This is normal APP 2 activity, and is a self check.

Disconnect the APP connector. This will force the system into limp-in mode.

Start the engine.

10. What is the state of the ETC warning light?

_____

11. What happens to engine rpm with the brake pedal depressed?

_____

12. What is the engine rpm with the brake pedal released?

---

13. Does engine rpm change when the accelerator pedal is depressed?

Turn the ignition OFF. Reconnect the APP sensor connector.

14. With the scan tool, retrieve all DTCs. Record them below.

---

15. With the engine off, unplug the throttlebody connector. Now start the engine and depress the accelerator pedal. Does the engine rpm change?

---

16. How high could you get the rpm to increase?

---

17. What happens with intake and exhaust cam timing?

---

18. How do you think the results can occur with the throttlebody unplugged?

---

19. Are any other modules affected?

Perform the ETC Learn procedure.

20. Was it successful?

With the scan tool, clear all DTCs, and then start the engine.

Notes:

LESSON 3 PCM OUTPUTS (CONTINUED)

MULTIPLE DISPLACEMENT SYSTEM (MDS) - 5.7 LITER HEMI

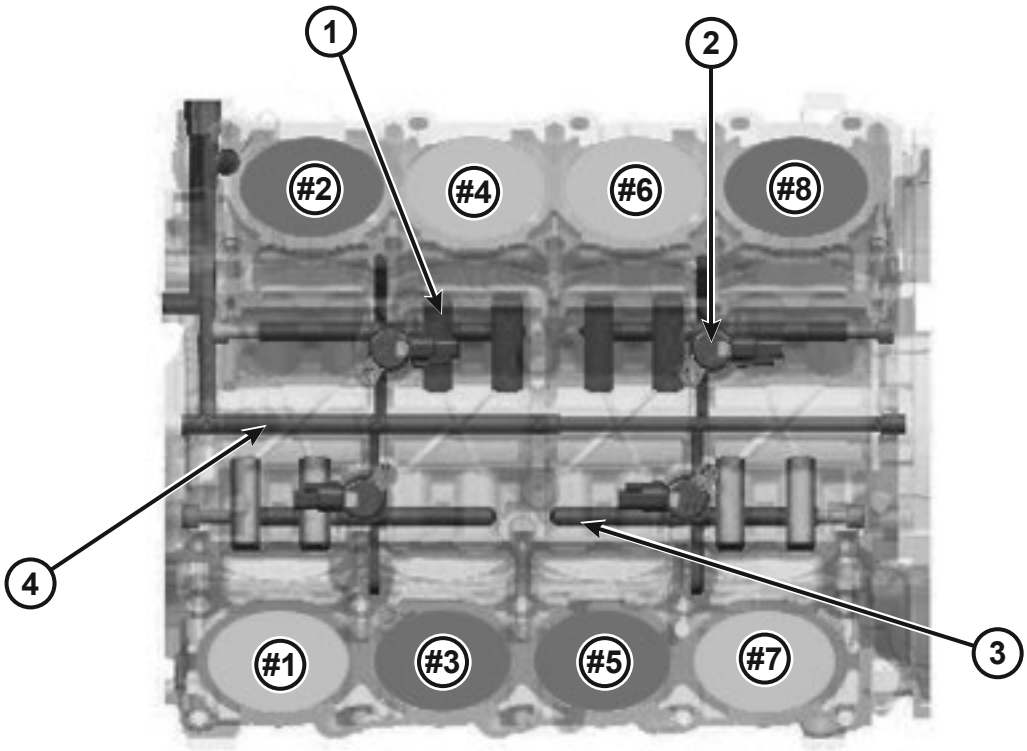

1	MDS Lifter Assembly	3	MDS Oil Return
2	MDS Oil Control Valve	4	MDS Oil Supply

Figure 88 MDS Components

The 5.7 liter HEMI® was the first FCA US LLC engine to offer a multiple displacement system (MDS). MDS is also available on the 6.4 liter applications. The multiple displacement system provides cylinder deactivation during steady-speed, low-acceleration, and shallow-grade climbing conditions to increase fuel economy.

MDS provides a 5–20% fuel economy benefit when operating in four-cylinder mode, depending on driving habits and vehicle usage. For EPA rating purposes, fuel economy is 8–15% higher than if the engine was operating on eight cylinders at all times. MDS is integrated into the basic engine architecture, requiring a minimum of additional parts: four solenoids, an oil temperature sensor, and a wire harness. Eight unique valve lifters and a modified camshaft are also required.

MDS Hydraulic Lifter

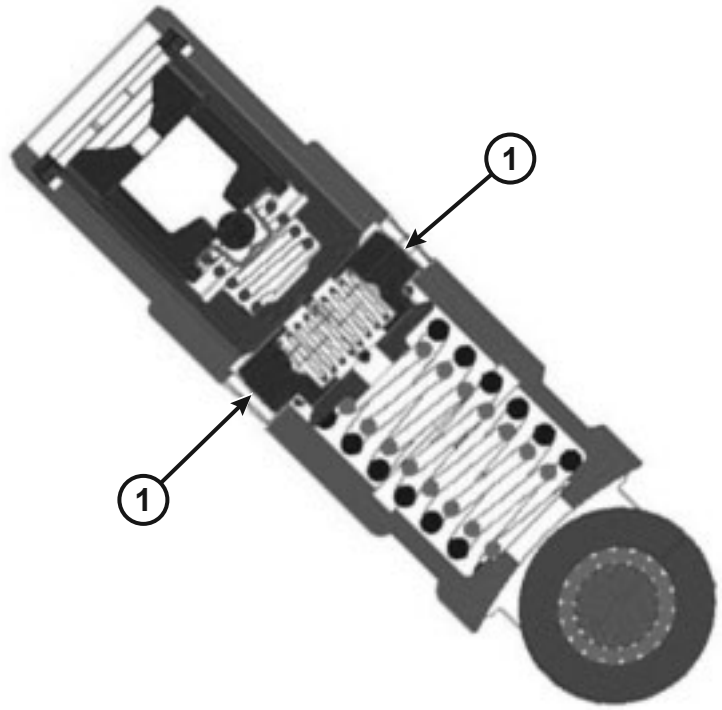

1	Latching Pins

Figure 89 MDS Hydraulic Lifter

MDS Operation

Both four- and eight-cylinder configurations of MDS have even firing intervals, providing smooth operation. Two cylinders on each bank are active when the engine is in four-cylinder mode (every other cylinder in the firing order). All of the MDS cylinders have unique hydraulic valve lifters that collapse when deactivated to prevent the valves from opening.

Engine oil pressure is used to activate and deactivate the valves. Oil is delivered through special oil passages drilled into the cylinder block.

MDS Solenoid

Figure 90 MDS Solenoid

Solenoid valves control the oil flow. When activated, pressurized oil pushes latching pins on each valve lifter, which then becomes a lost motion link. Its base follows the camshaft, but its top remains stationary. The top is held in place against the push rod by light spring pressure, but unable to move because of the much higher force of the valve spring.

Deactivation occurs during the compression stroke of each cylinder, after air and fuel enter the cylinder. Ignition then occurs, but the combustion products remain trapped in the cylinder under high pressure, because the valves no longer open. No air enters or leaves the cylinder. During subsequent piston strokes, this high-pressure gas is repeatedly compressed and expanded like an air spring, but fuel is not injected.

Beginning in 2009, the 5.7 liter HEMI® MDS lifters were redesigned to allow for more camshaft lift when deactivated. These newer lifters can be used in prior model year 5.7 liter engines.

NOTE: It is critical to use the recommended oil viscosity in 5.7 liter engines that use MDS

NOTE: Mopar special tool 2028200090, MDS solenoid removal tool, should be used when removing the MDS solenoid.

VARIABLE CAMSHAFT TIMING (VCT) SYSTEM

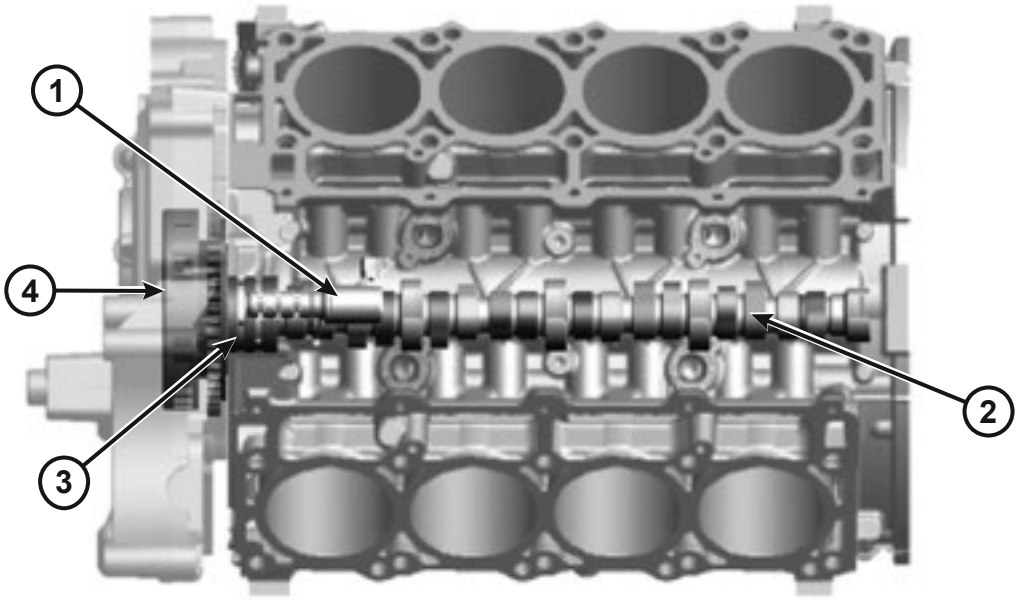

1	VCT Oil Control Valve	3	Camshaft Oil Passages
2	Camshaft	4	VCT Actuator

Figure 91 Variable Camshaft Timing (VCT) System

This system is controlled by the powertrain control module (PCM). The PCM varies the timing of the valves, advancing or retarding their opening, relative to piston motion. The lobes on the camshaft open the valves for a certain amount of time during the combustion cycle. The timing of the opening and closing of the valves is controlled by the VCT system. In a non-VCT system, the timing is fixed and optimized for a certain engine speed, so there is a trade-off that limits power and torque, emissions reduction, and fuel economy. VCT allows the timing to change, which means the engine can achieve the best overall performance across the engine's normal operating range.

The oil control valve (OCV) is an electronically pulse-width-modulated solenoid that controls oil flow to the camshaft phaser by taking supply oil and routing it to two oil passages inside the OCV. The OCV is mounted horizontally and centered behind the timing cover. The OCV is attached to the block. The OCV connector is part of the MDS harness.

VCT System Operation

At 0% PWM, the camshaft is in the advanced position and is used to increase low-rpm torque by moving the power band lower in the rpm range.

At 100% PWM, the camshaft is in the retard position and is used to increase high-rpm power by moving the power band higher in the rpm range.

VCT Camshaft Components

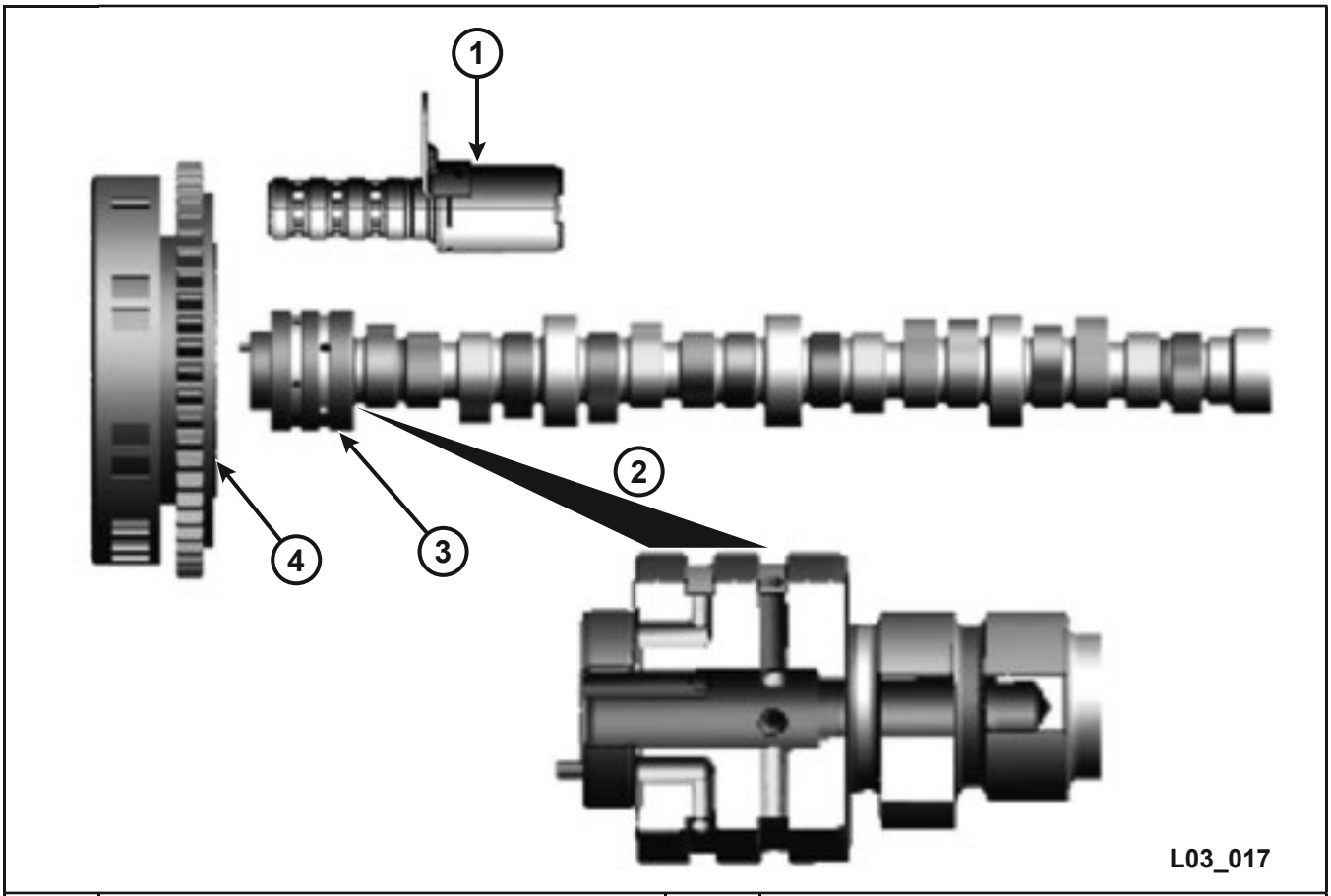

1	Camshaft Internal Oil Passages	3	Camshaft with Oil Passages
2	Oil Control Valve (OCV)	4	Camshaft Phaser with Tone Wheel

Figure 92 Variable Camshaft Timing Components

The camshaft phaser replaces the standard camshaft sprocket. The phaser is attached to the camshaft by a single bolt. The phaser has internal vanes and oil chambers. The OCV regulates oil flow to either side of the vanes to cause the phaser to rotate and change the position of the camshaft. One oil gallery supplies oil to the OCV and two oil galleries supply oil to the number 1 camshaft bearing to advance and retard the camshaft phaser. There is a tone wheel attached to the camshaft phaser that is used by the camshaft position sensor.

VCT Oil Supply

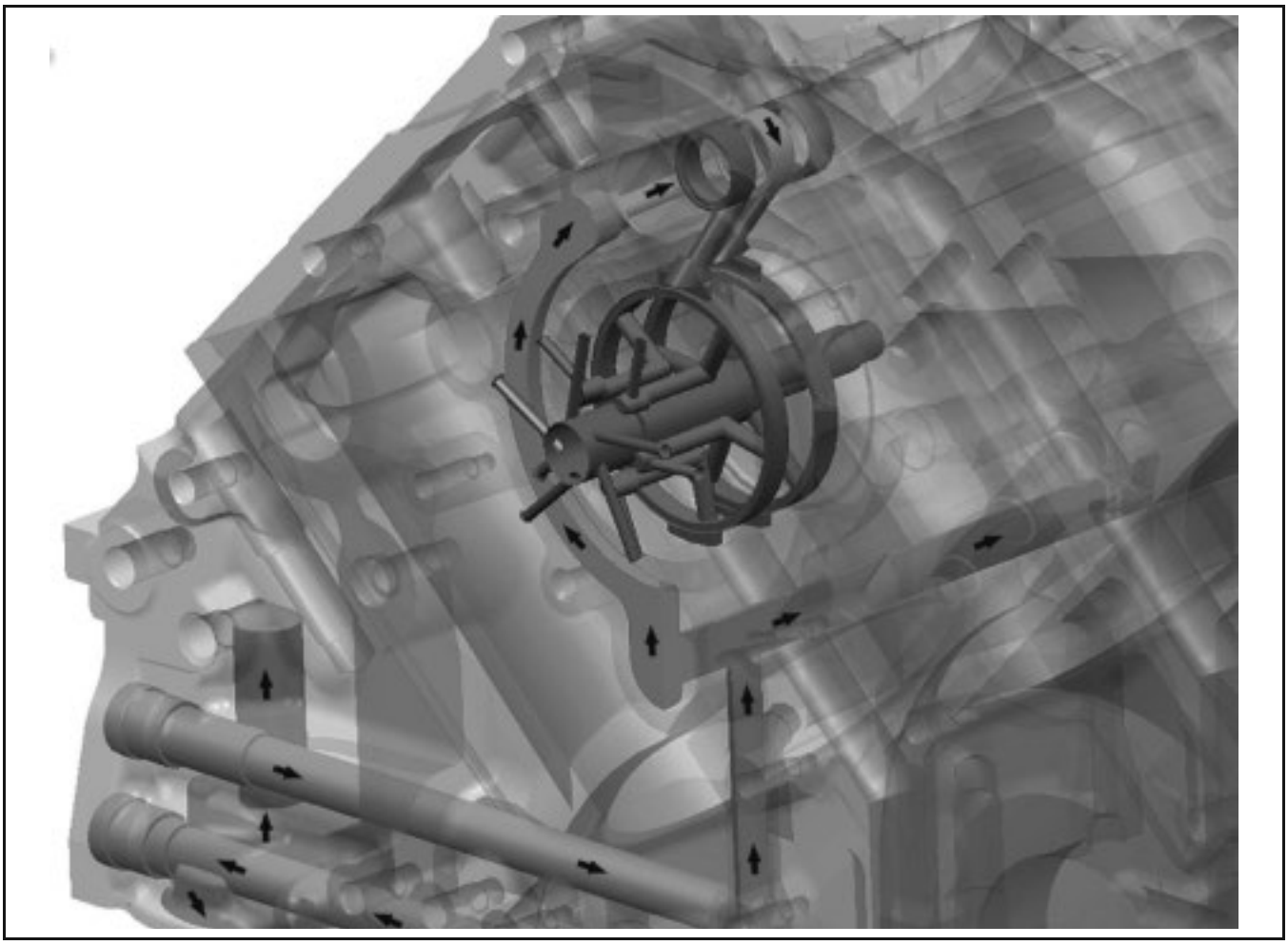

Figure 93 VCT Oil Supply

Oil flows from the oil pump, through the oil filter, then up through the block, where it splits to supply both the main gallery and the VCT system. In the VCT system, the oil runs through a half-horseshoe shaped gallery to the OCV, camshaft phaser, and camshaft.

The OCV controls oil flow to the camshaft phaser, controlling the operation of the VCT phaser. If the OCV is 0%, the valve timing is advanced. If the OCV is at 100%, the valve timing is retarded. If the OCV is at 50%, there is no oil flow and the system holds its current position.

Oil Control Valve Operation

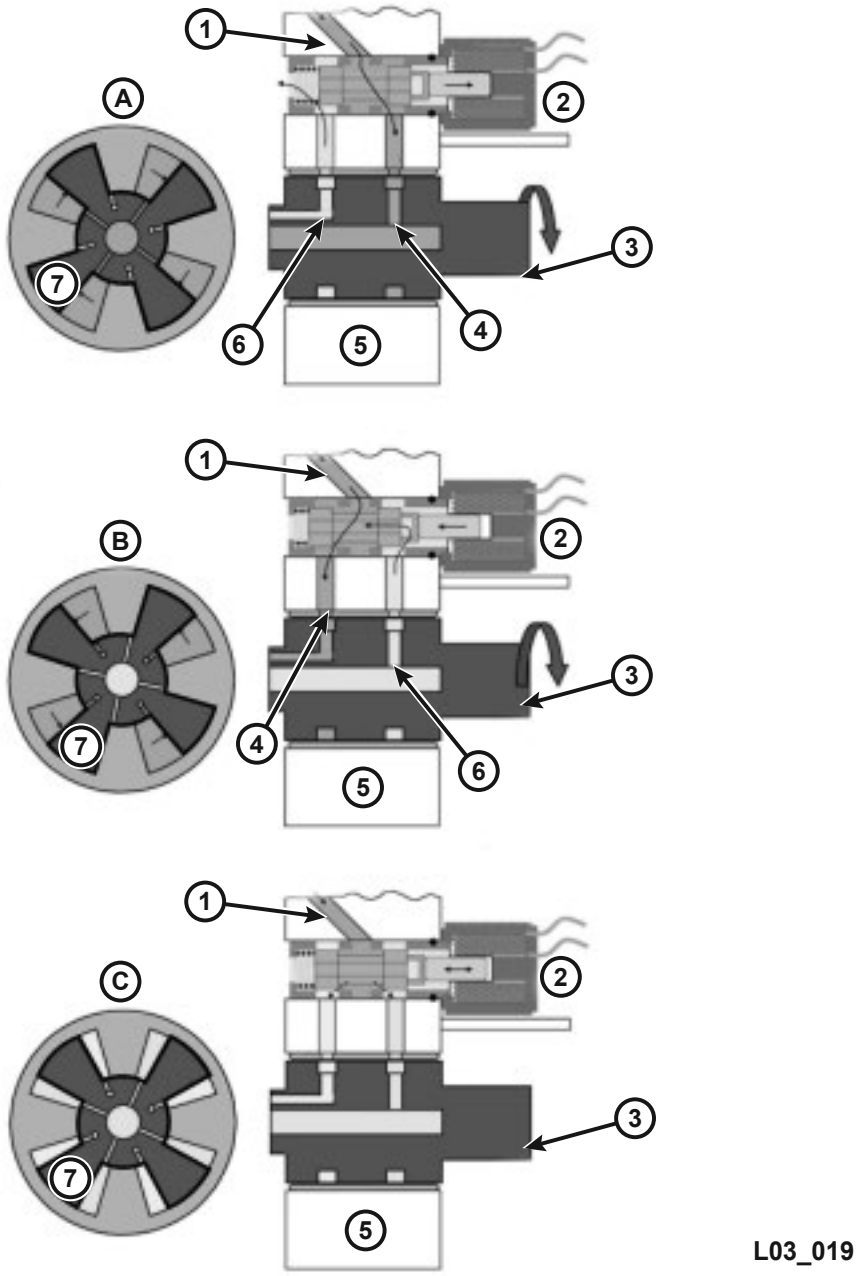

A	OCV at 0% Duty Cycle; Phaser in Advance Position	3	Camshaft
B	OCV at 100% Duty Cycle; Phaser in Retard Position	4	Oil Supply to Phaser
C	OCV at 50% Duty Cycle; Phaser in Hold Position	5	Cylinder Block
1	Oil Supply Passageway	6	Oil Return Passageway
2	Oil Control Valve	7	Vanes

Figure 94 Oil Control Valve Operation

Variable Valve Timing Systems

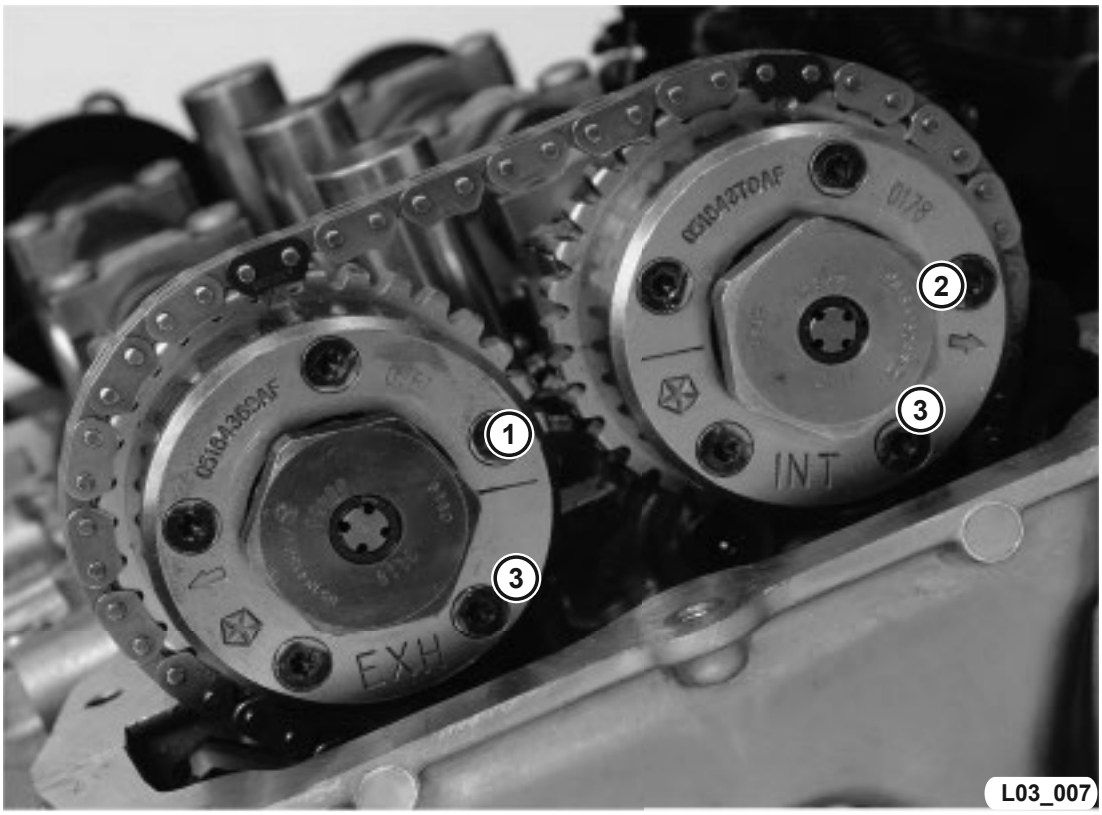

1	Exhaust Camshaft Phaser	3	Oil Control Valves
2	Intake Camshaft Phaser		

Figure 95 3.6 liter Cam Phasers and Oil Control Valves

There are several different versions of variable valve or camshaft timing applications used on many engines today. The Pentastar 3.6 liter and four-cylinder World engines both vary the intake and exhaust cam timing independently. This allows for variations in valve overlap.

All Pentastar and World engines are equipped with VVT by means of dual independent camshaft phasers. The system advances or retards the intake and exhaust valve timing to adjust the valve overlap as well as camshaft to crankshaft correlation. The system improves performance, mid-range torque, idle quality, and fuel economy, and reduces emissions. Each phaser can move up to 25 degrees (50 crankshaft degrees) relative to the base camshaft position, resulting in an increase in valve overlap of up to 100 crankshaft degrees.

Valve Lift Profiles

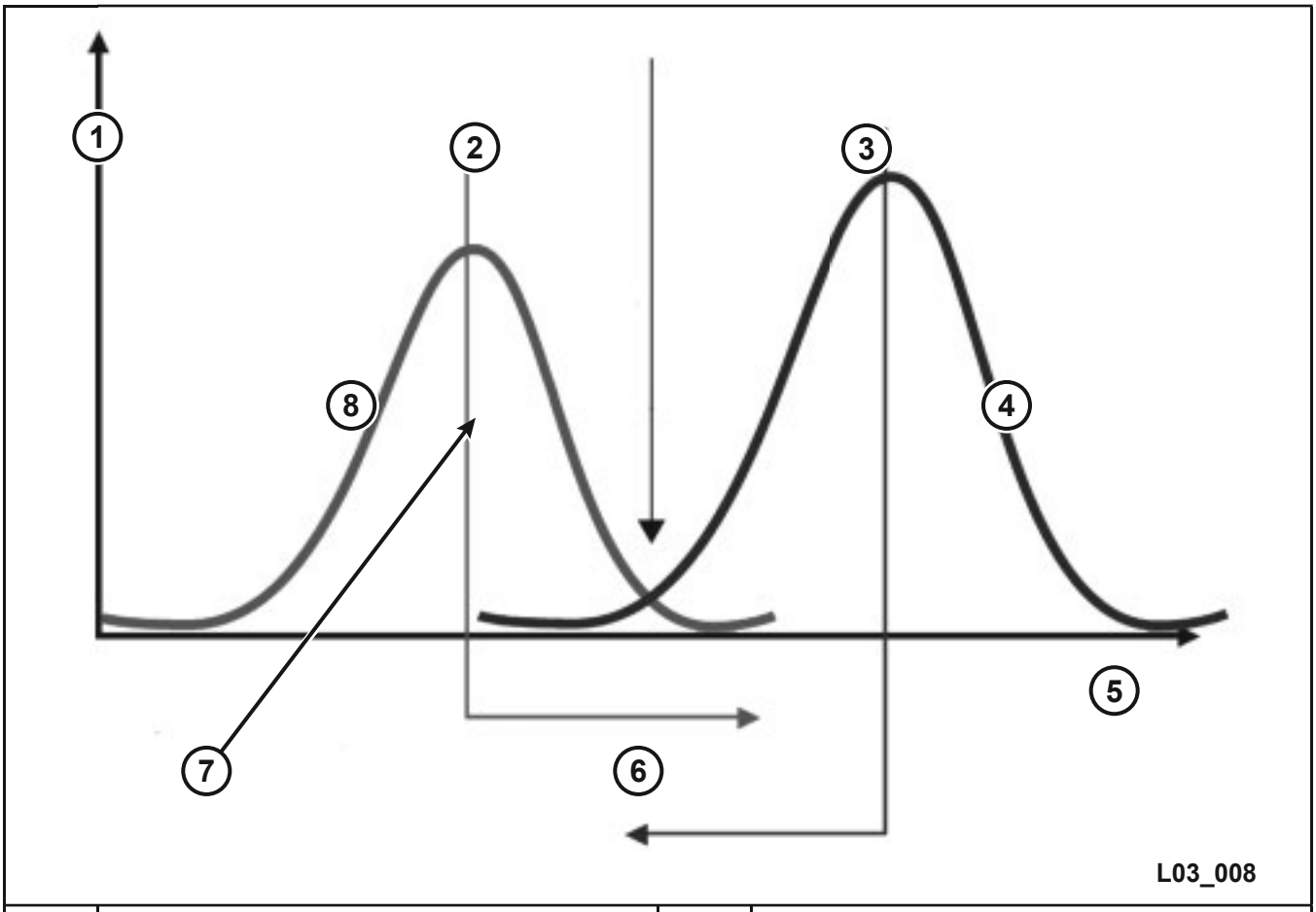

1	Valve Lift	5	Crank Angle
2	Small Overlap at Low rpm	6	Phase Direction
3	Large Overlap at High rpm	7	Minimum Valve Overlap
4	Intake Valve Opening Profile	8	Exhaust Valve Opening Profile

Figure 96 Valve Lift Profiles

The phasers begin at the minimum valve overlap condition, with the intake phaser biased toward a retard position and the exhaust biased toward the advanced position. The phasers rotate away from their start (or lockpin) positions as valve overlap increases.

Valve Overlap Strategy

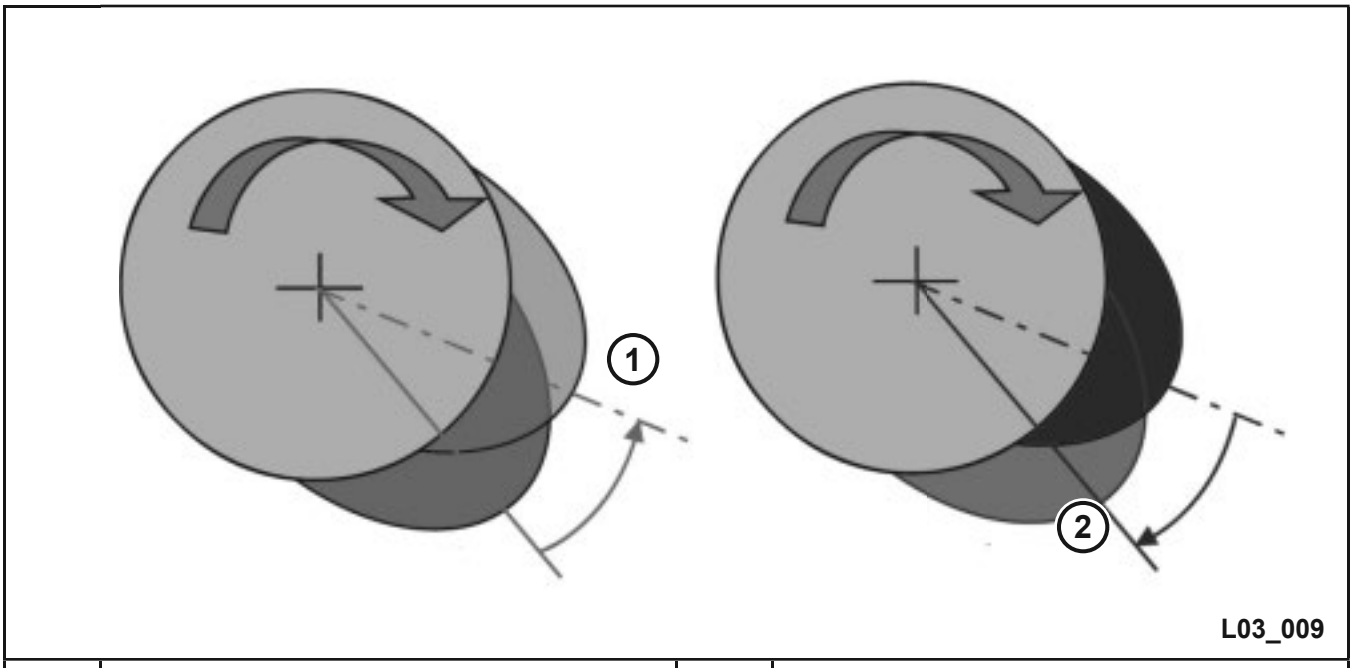

1	Exhaust Cam Retards (valve opens later)	2	Intake Cam Advances (valve opens earlier)

Figure 97 Valve Overlap Strategy

The phaser at 0% actuator duty cycle is in lockpin position (fully advanced). At 100% actuator duty cycle, the exhaust camshaft retards up to 25 degrees camshaft and the exhaust valve opens later. The phaser at 0% actuator duty cycle is in lockpin position and the intake phaser retards. At 100% duty cycle, the intake camshaft advances up to 25 degrees camshaft and the intake valves open earlier.

Camshaft Phaser Actuator Solenoids

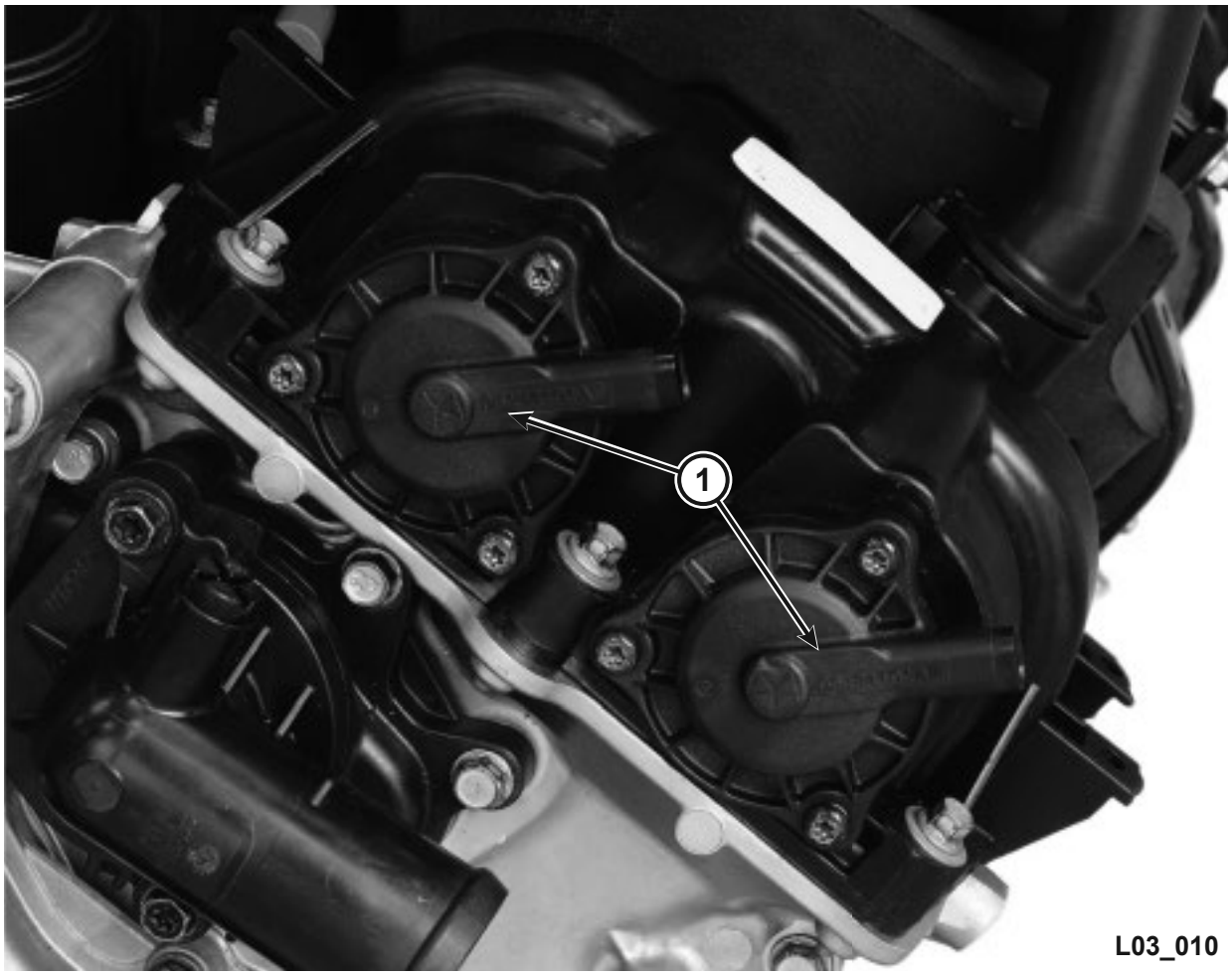

1	Camshaft Phaser Solenoid Actuators

Figure 98 Camshaft Phaser Actuator Solenoids

The camshaft phaser actuator solenoids are electrically pulse-width-modulated solenoids. The pintle of the solenoid pushes into the oil control valve located in the center of the camshaft phaser. The movement of the control valve changes the position of the actuator.

Camshaft Phaser Oil Flow

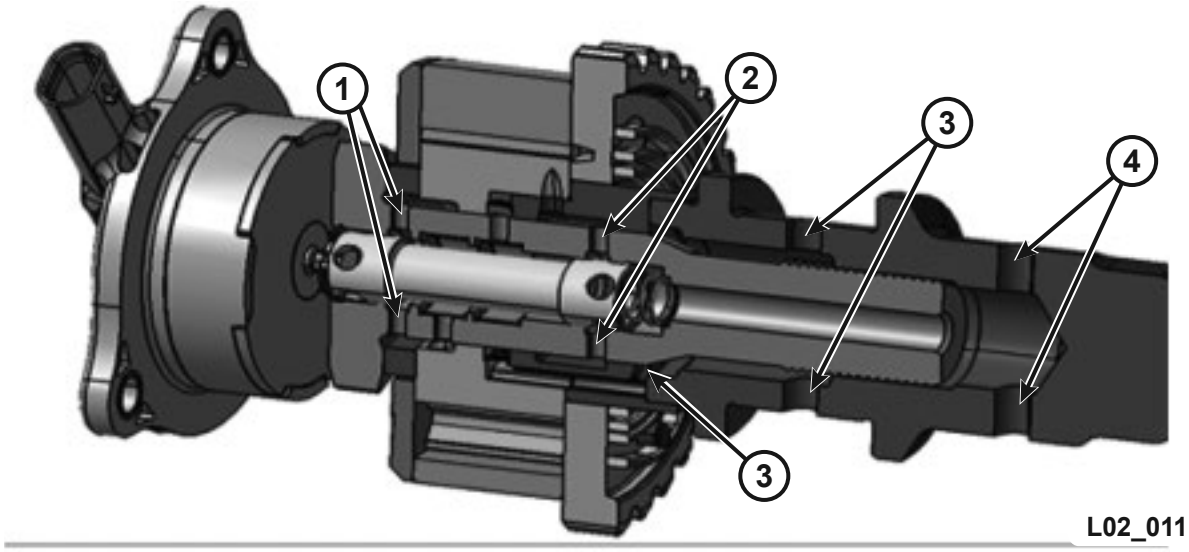

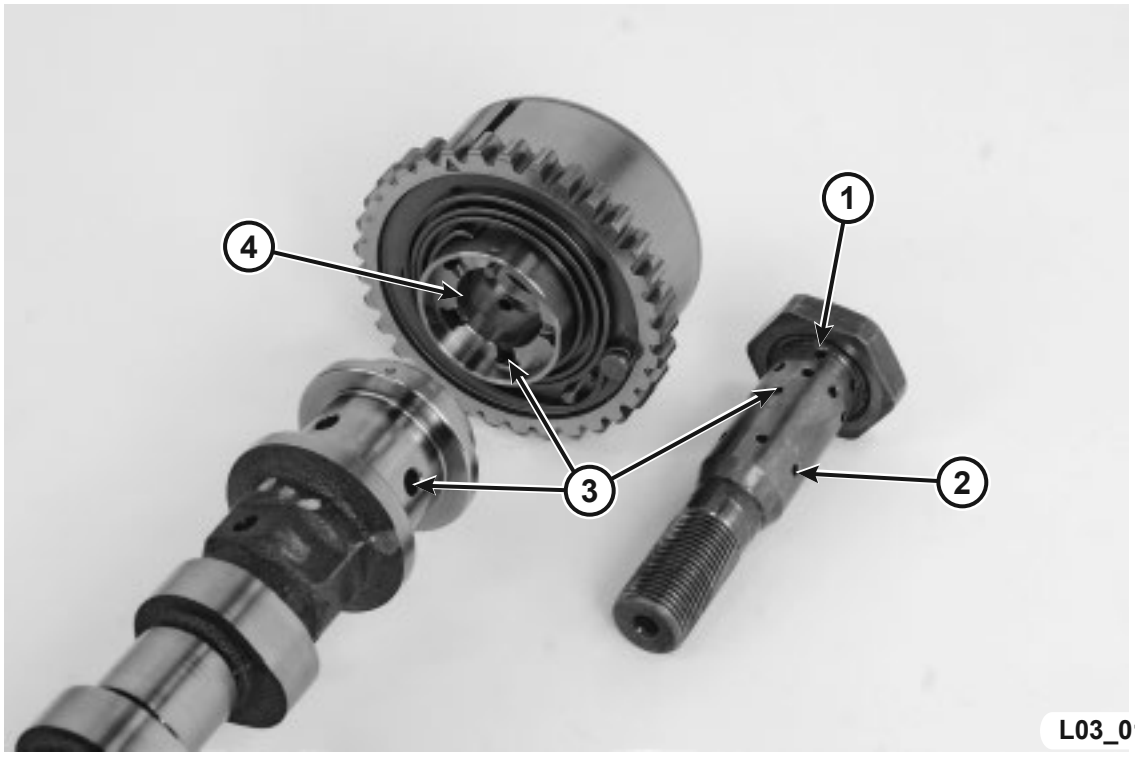

1	Advance Passageway	3	Oil Supply Passageway
2	Retard Passageway	4	Oil Vent Passageway

Figure 99 Camshaft Phaser Oil Flow

Cam Phaser with Cover Removed

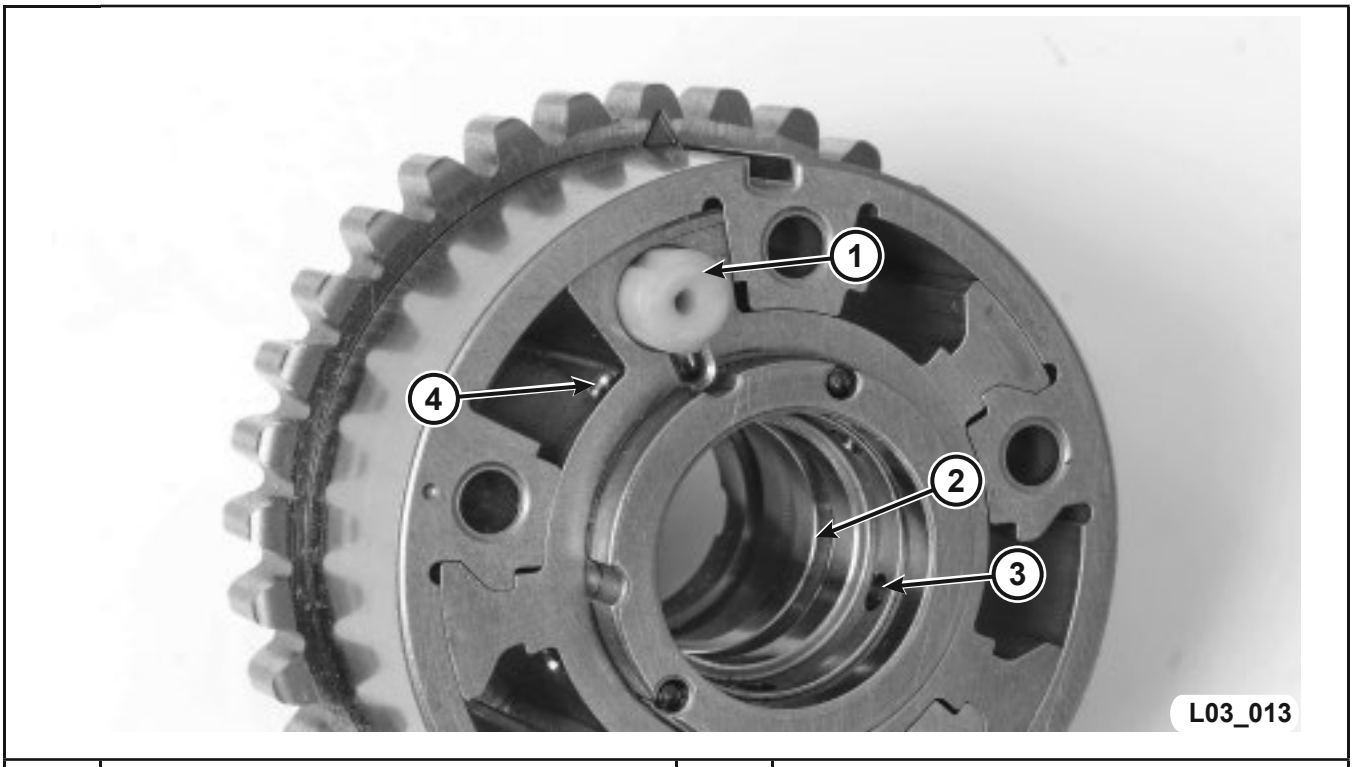

1	Phaser Lockpin	3	Advance Oil Passageway
2	Oil Supply Ring	4	Advance Oil Passageway

Figure 100 Cam Phaser with Cover Removed

Each phaser position is adjusted using regulated oil pressure through an oil control valve (OCV), which also serves as a bolt mounting the camshaft phaser assembly to the camshaft.

The camshaft phaser assembly replaces the standard camshaft sprocket. At engine start-up, system oil pressure overcomes spring pressure and unlocks the phaser lockpin in preparation for phasing. The phasers remain in this position until a PCM signal is given to pulse-width modulate the actuator.

The spool valve is spring-loaded. If the actuator is energized, it pushes on the spool valve. When the oil control valve is de-energized, the spring-loaded spool valve pushes back against the actuator. To begin phaser movement, a voltage signal is applied to the actuator to extend or retract the solenoid pintle. The pintle pushes against an internal spool valve within the bolt, moving the valve forward and backward to direct oil flow.

The position of the spool inside the bolt determines which ports and chambers inside the phaser are fed. The actuator advances the timing of the phaser assembly, retards it, or holds a desired position relative to the camshaft.

Camshaft Actuator Operation

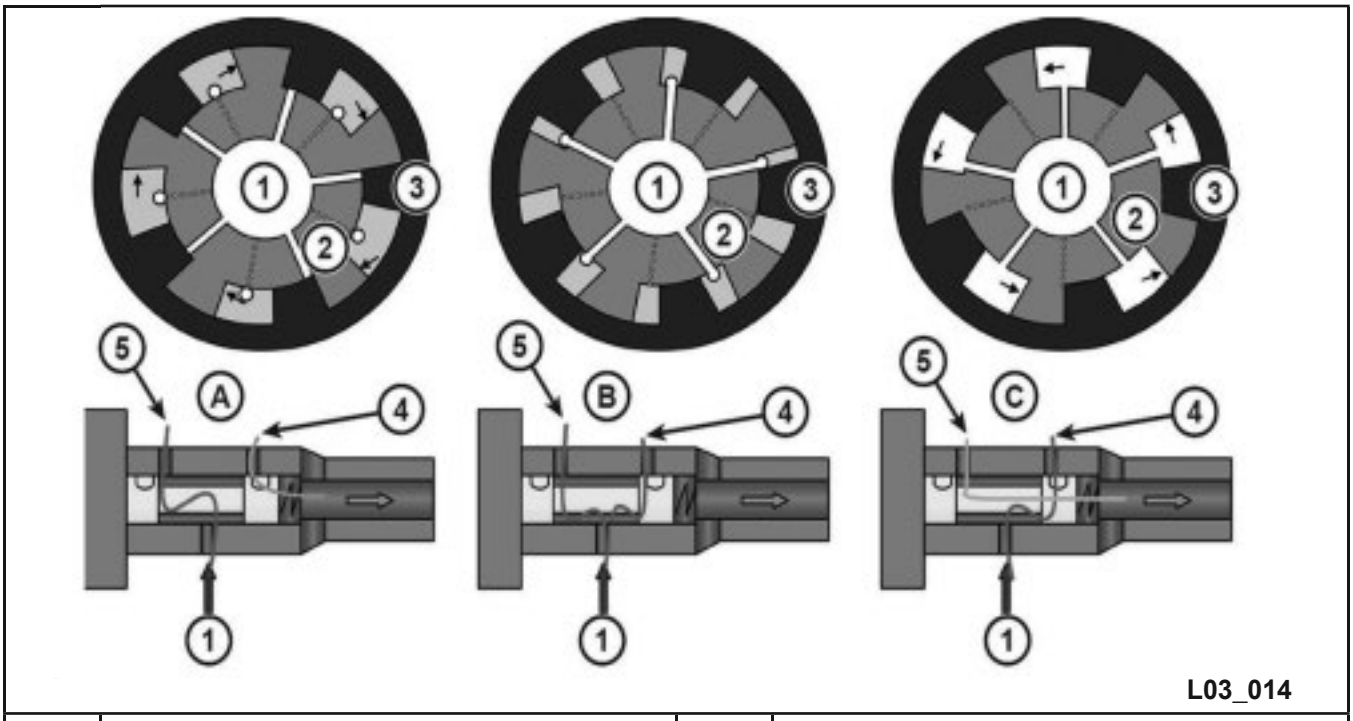

A	OCV at 0% Duty Cycle (lockpin)	2	Vane (attached to camshaft)
B	OCV at 50% Duty Cycle (Phaser in Hold Position)	3	Sprocket (attached to timing chain)
C	OCV at 100% Duty Cycle Phaser Transitions to Maximum Travel	4	Retard Oil to Phaser
1	Oil Supply	5	Advance Oil to Phaser

Figure 101 Spool Position vs. Rotor Vane Movement (exhaust phaser shown)

As oil pressure pushes against the vanes of the phaser rotor, the rotor begins to move. Because this rotor is physically attached to the camshaft, rotor rotation causes the camshaft position to rotate relative to the standard sprocket position.

The variable valve timing system is designed and calibrated to operate using specific weight engine oil. Using any other type of oil may cause system response and control issues, potentially causing fault codes and MIL lights, depending on the severity. Always refer to service information for proper oil viscosity. 3.6 liter phasing is disabled when oil temperature is below -5 °C (23 °F) and above 120 °C (248 °F). As long as all other enablers such as oil pressure, load, and speed are met, phasing can occur within this operating range.

Exhaust Camshaft Phaser Spring

1	3.6 liter Exhaust Camshaft Phaser Clock Spring

Figure 102 Exhaust Camshaft Phaser

Upon engine shutdown, both phasers return to their lockpin position as oil pressure is reduced. Because the exhaust phaser needs to travel to a position above and beyond the standard camshaft clockwise rotation, the assistance of a clock spring is required. The intake phaser relies on the torsional resistance from the valvetrain to push it back toward the lockpin position.

It is possible that the intake phasers do not have a chance to return to the lockpin position. In this case, the phaser returns to lockpin position upon the first revolution during engine restart.

Cam Phaser to DTC Relationship

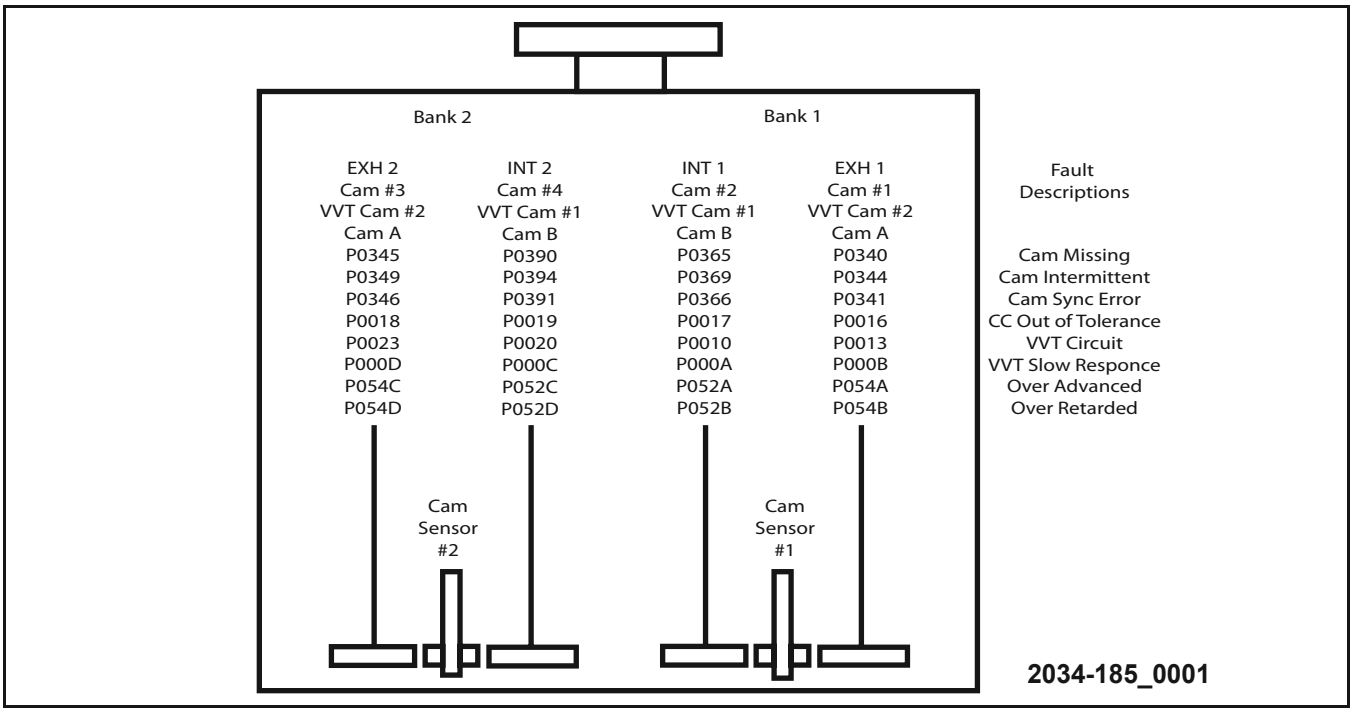

Figure 103 Cam Phaser to DTC Relationship

MultiAir® Actuator Assembly

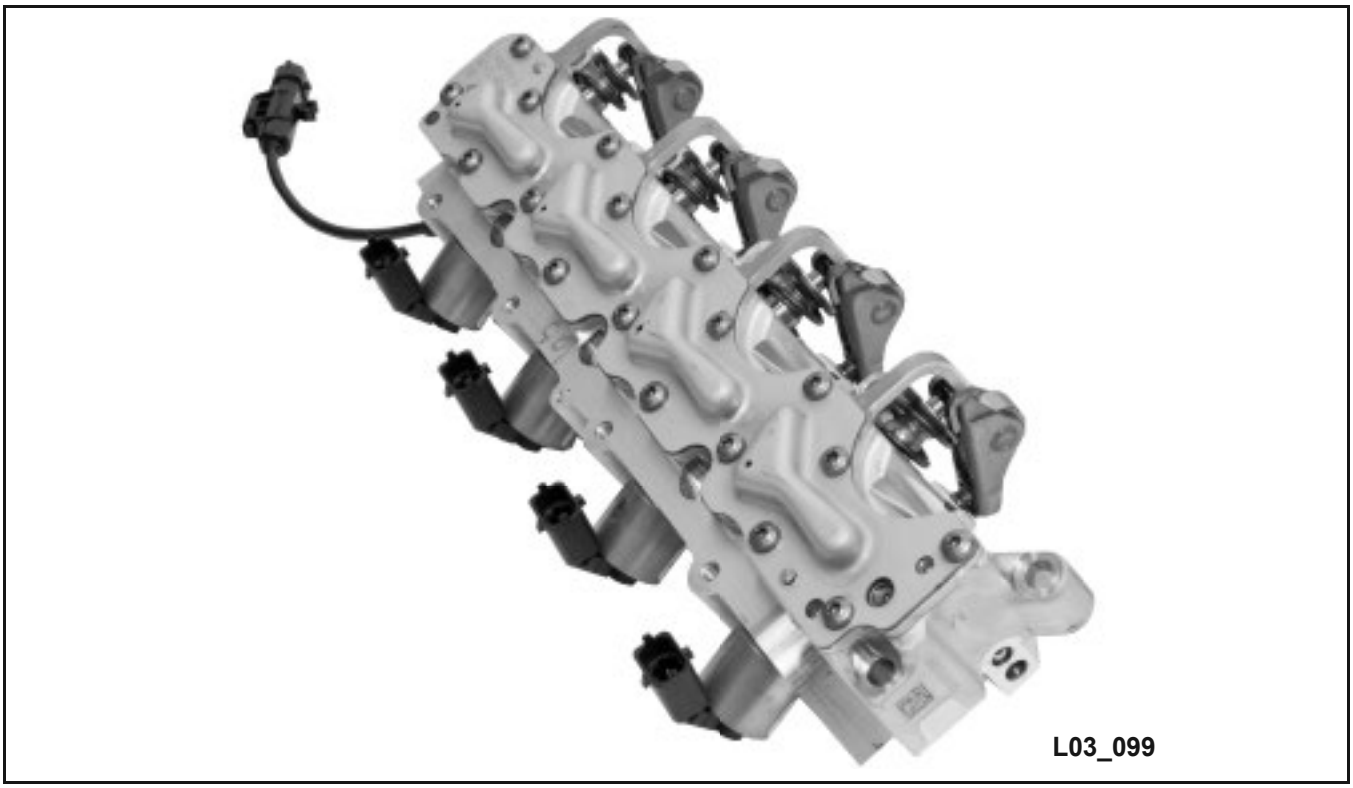

Figure 104 MultiAir Actuator Assembly

The primary component of the MultiAir system is the actuator. The actuator assembly is located above the intake valves, next to the camshaft. The intake lobes on the camshaft operate hydraulic pumping elements instead of directly acting on the valves. The pumping elements provide high-pressure oil to open the intake valves.

The relationship between the camshaft lobe and the intake valve is controlled by a solenoid-operated hydraulic port. The PCM is able to vary the solenoid activation, providing variable valve operation.

The high-pressure oil in the actuator assembly passageways is delivered to the solenoid valve from the pumping element. The solenoid valve is a normally-open hydraulic control valve; the high-pressure oil is vented from the valve to a reservoir area unless the valve is powered.

When the valve is supplied 12 volts, the solenoid closes the vent portion of the valve. When the valve vent is closed, the high-pressure oil is forced around the solenoid valve and through a passageway to operate the intake valves.

One solenoid valve is used to control two intake valves for each cylinder. This is accomplished by a hydraulic bridge. The solenoid valves are mechanically wedged (locked) into the actuator.

If a solenoid malfunctions or fails, the complete actuator assembly must be replaced.

MULTIAIR SYSTEM DIAGNOSIS

Because the MultiAir system is so closely monitored, the diagnostics of the system are strongly DTC driven. If the system does not perform according to design, many DTCs may be produced from a condition in the system.

Engine performance diagnostics must be performed according to service manual guidelines to eliminate unnecessary replacement of system components. The MultiAir engine is still a four-stroke piston engine with all the typical failure modes of a standard engine.

If there is a failure of the system, the result is usually a no-start condition. A no-start is preferred to a possible limp-in mode because the engine is an interference design engine. If the valve timing is not precisely controlled, there is a remote possibility of catastrophic engine damage as the pistons can come into contact the valves.

Camshaft

The camshaft in the MultiAir engine is in the standard position of an exhaust camshaft in a dual overhead cam (DOHC) engine. The camshaft is modified to include another four lobes that function as the intake lobes. However, the lobes are used to create hydraulic pressure in the actuator assembly instead of directly driving the intake valves.

Roller Follower

The four camshaft lobes drive four roller followers mounted on the actuator assembly. The roller followers are similar to other roller follower designs used in overhead cam engines. The roller feature reduces friction between the cam lobe and the follower. Each follower aligns to a pumping element in the actuator assembly. The followers are serviceable separately from the actuator.

MultiAir Oil Screen

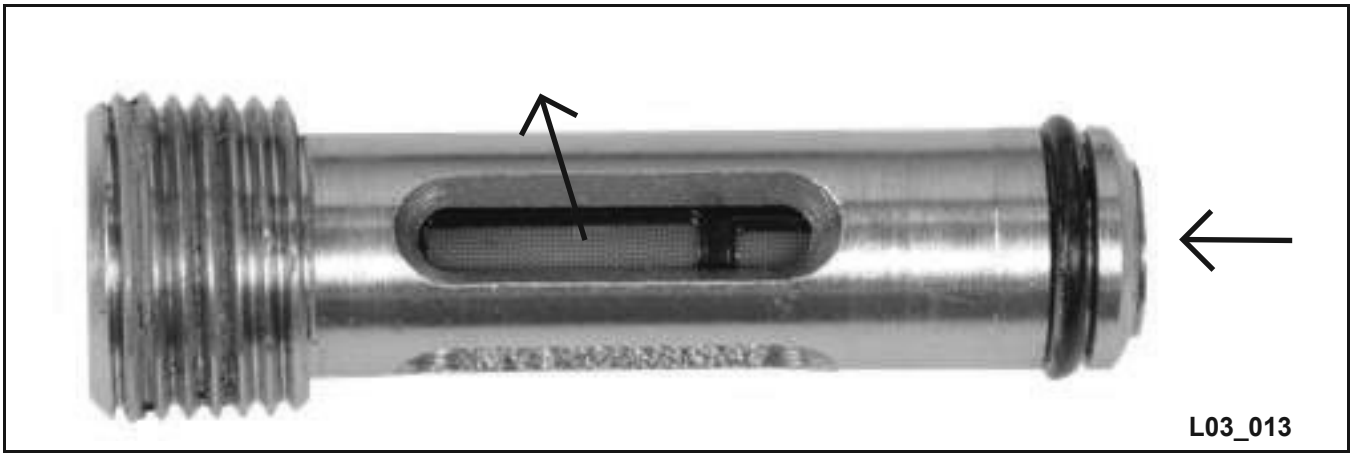

Figure 105 MultiAir Oil Screen (flow direction shown)

The MultiAir system has an internal filter screen that protects the MultiAir system from debris that may make it past the oil filter. When diagnosing MultiAir concerns that oil pressure and flow could affect or when diagnosing a no-start concern, always make sure that this filter is not restricted or plugged.

MultiAir Operation Phases

The system provides five possible phases of operation. Each phase offers unique advantages compared to normal camshaft operation.

Full Lift Phase

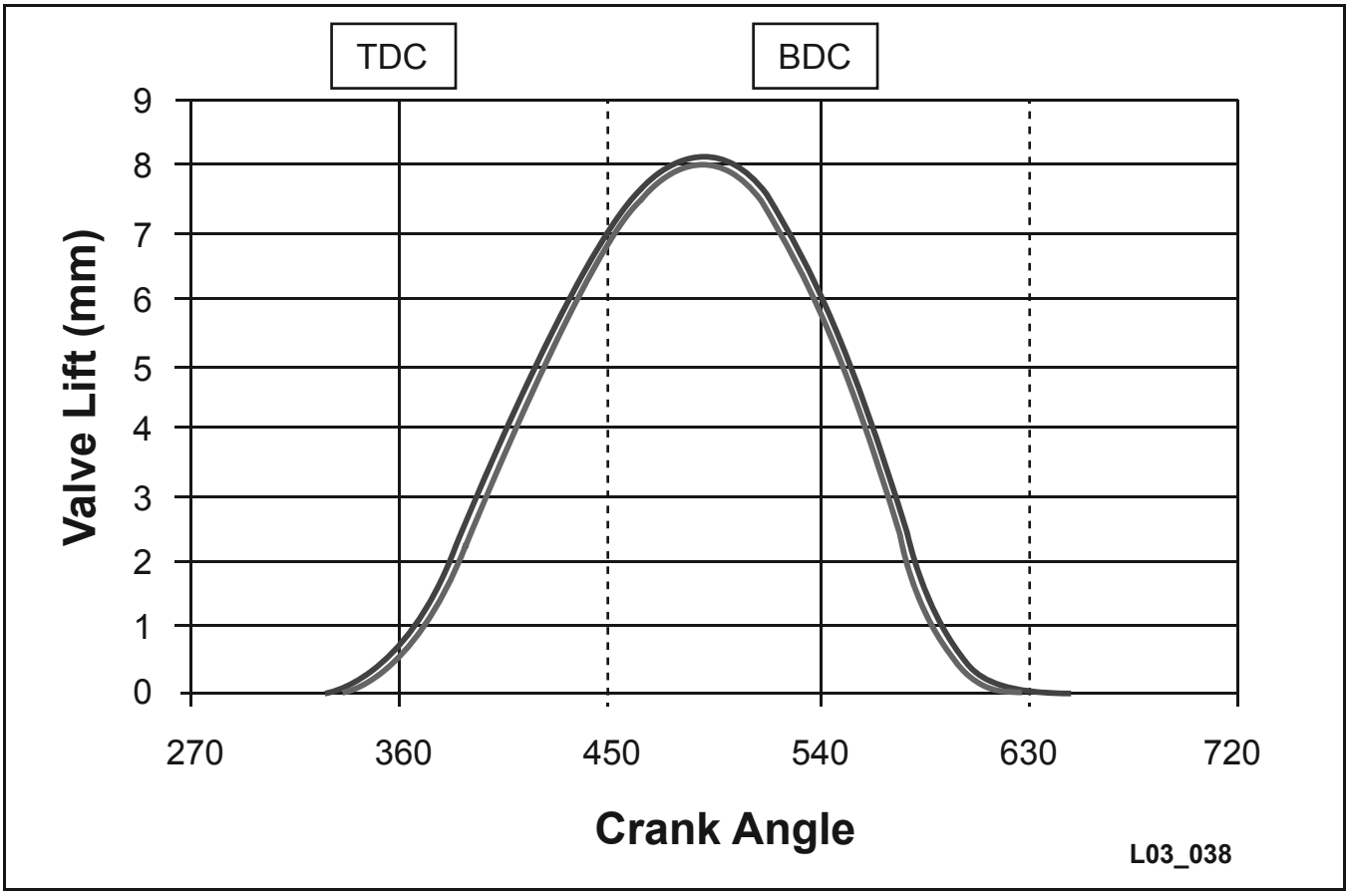

Figure 106 Full Lift Phase

When the system functions in the full lift phase, all of the cam lobe lift is transferred to the intake valves. The intake lobe is designed with a very aggressive duration and lift profile. This results in good power in the upper rpm ranges with high loads. This profile is rarely used in everyday driving.

Early Intake Valve Closing

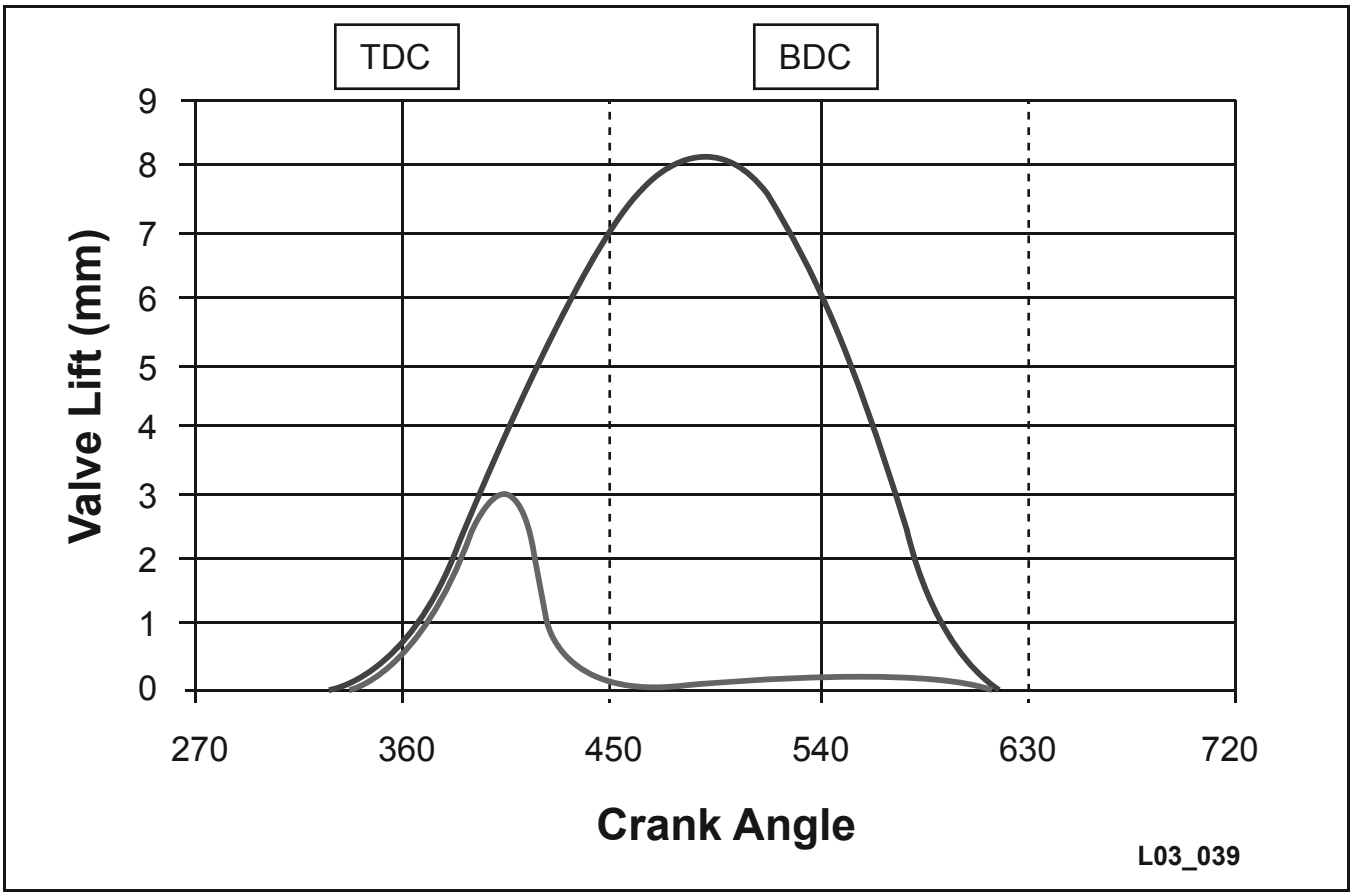

Figure 107 Early Intake Valve Closing Phase

When the system functions in the early intake valve closing (EIVC) phase, the cam lobe lift is transferred to the intake valves at the beginning of the lift duration cycle. If the hydraulic connection between the cam lobe and the valve is taken away before the lobe reaches full lift, the exact timing and lift can be infinitely varied to meet driver requirements.

The EIVC phase provides smooth engine performance and more torque at lower engine speeds.

Late Intake Valve Opening Phase

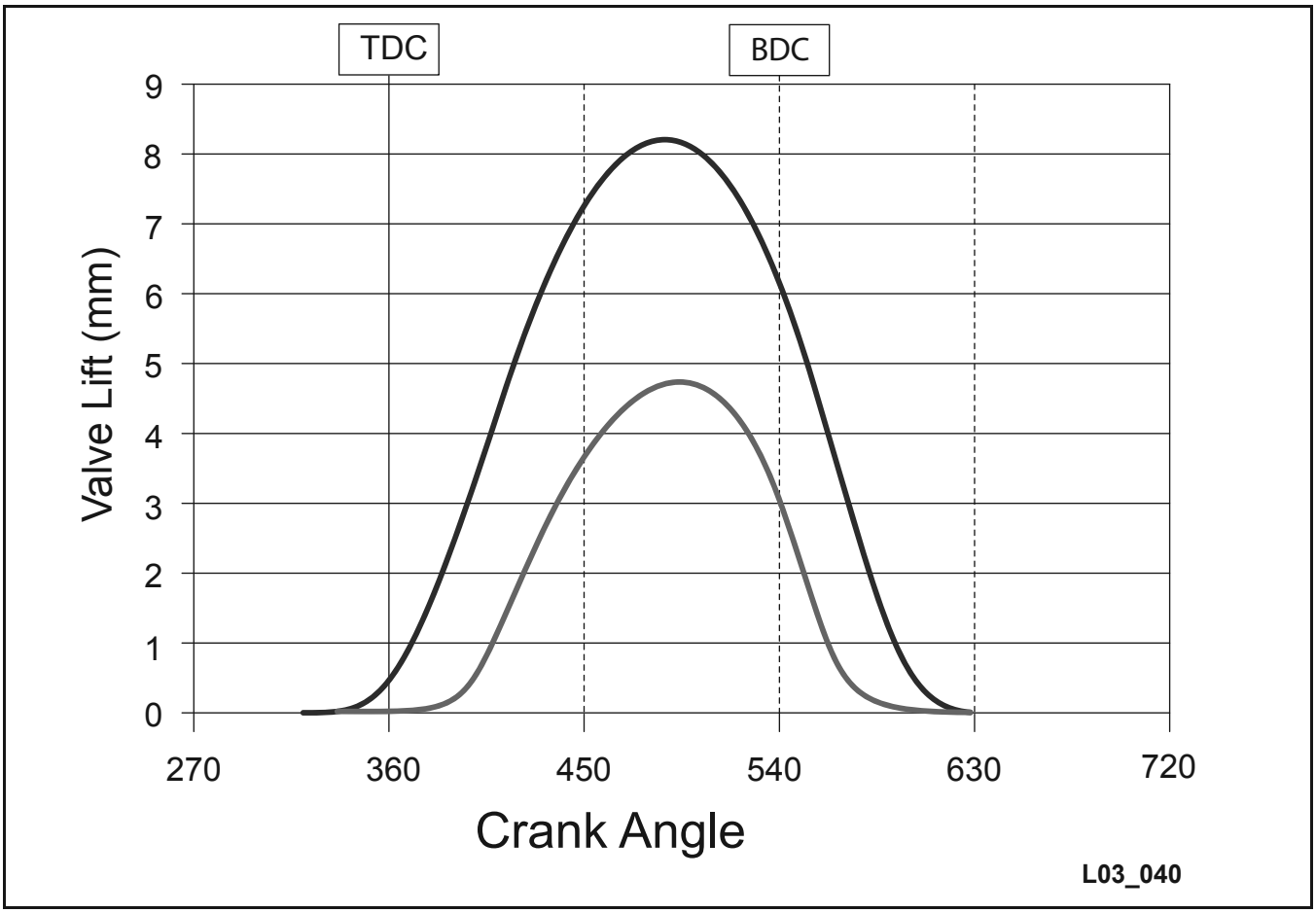

Figure 108 Late Intake Valve Opening Phase

When the system functions in the late intake valve opening (LIVO) phase, the cam lobe lift is NOT transferred to the intake valves at the beginning of the lift duration cycle.

The hydraulic connection between the cam lobe and the valve is completed after the roller follower has already begun riding the ramp of the cam. When the hydraulic connection is completed, the intake valve begins to open.

The valve lift timing can be varied infinitely within the full profile of the cam lobe. As long as the hydraulic connection is completed before the cam lobe reaches its maximum lift, some valve lift results. The lift profile follows the cam lobe profile for the time that the hydraulic link is complete. Like EIVC, the exact timing and lift can be infinitely varied to meet driver requirements.

LIVO phase provides lower emissions and a higher efficiency at lower loads or idle conditions.

Multi-lift Phase

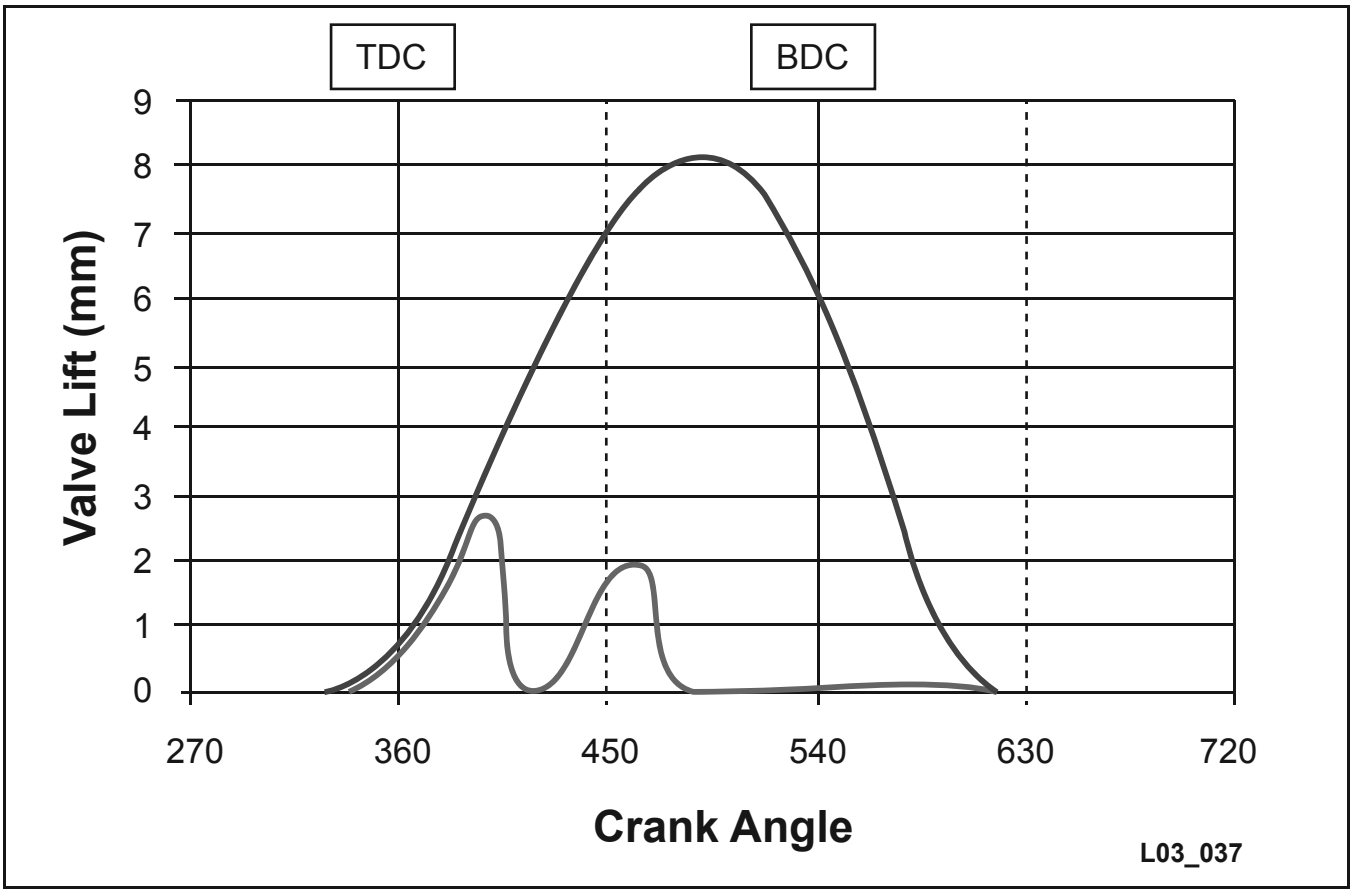

Figure 109 Multi-lift Phase

The multi-lift phase is the most complicated of the phases. Multi-lift is a combination of EIVC and LIVO because the hydraulic connection between the cam lobe and the intake valve is closed early and then re-opened later in the cycle. This creates a longer duration valve lift with a smaller amount of lift. The result is a higher velocity of airflow into the cylinder over a longer period of time.

Multi-lift may be used in mixed driving of acceleration and deceleration with moderate engine speeds.

Closed Phase

The closed phase leaves the intake valve closed by not utilizing the cam lobe to lift the intake valve. This phase is currently not in use.

Notes:

Notes:

ACTIVITY 3 DIAGNOSE PCM OUTPUTS (CONTINUED)

TASK TWO: VARIABLE CAMSHAFT TIMING SYSTEM DIAGNOSIS

Using service information, your Student Workbook, and the classroom vehicle, answer the following questions.

NOTE: The VCT system is listed in wiTECH™ 2.0 as VVT.

Answer the following questions as you complete the activity.

1. Using your Student Workbook, list the oil temperature at which the VCT system will operate.

_____

2. Why is this important?

_____

_____

Start the engine and allow it to reach operating temperature. Using the scan tool, navigate to the data tab and record the values in the table below.

Scan Tool Data	Values	Scan Tool Data	Values
VVT Oil Temp		Exhaust Cam 1 Actual Position	
Exhaust 1 Cam Desired Position		Exhaust Cam 1 Crank Difference	

Increase engine speed to 1500 rpm and observe the desired and actual readings of the camshaft.

3. Record your observation below.

_____

4. If the cam did not move, list all the possible causes below.

_____

_____

Turn the engine off. Navigate to the Systems Tests tab and select VVT System Test.

5. How many different set points are available to select for this test?

_____

6. What two things must be done to enable this test to run?

_____

Turn the ignition ON. Navigate to the Misc Functions tab and then Exhaust Phaser 1 Cleaning, and then actuate the test.

7. Was any abnormal movement observed?

_____

Navigate to the Actuators tab. Select VVT Exhaust Phaser 1 Actuator.

8. To what duty percentages can the actuator be commanded?

_____

9. Why would you use this when diagnosing a vehicle?

_____

_____

TASK THREE: VARIABLE VALVE TIMING SYSTEM DIAGNOSIS

Using service information, your Student Workbook, and the classroom vehicle, answer the following questions.

1. Using your Student Workbook, list the oil temperature at which the VVT system will operate.

_____

2. Why is this important?

_____

_____

3. Start the engine and allow it to reach normal operating temperature. Select the PCM data items and record their values in the table below.

Scan Tool Data	Values	Scan Tool Data	Values
VVT Oil Temp		**VVT Oil Pressure**	
Intake Cam 1 Desired		**Exhaust Cam 1 Desired**	
Intake Cam 1 Actual		**Exhaust Cam 1 Actual**	
Intake Cam 2 Desired		**Exhaust Cam 2 Desired**	
Intake Cam 2 Actual		**Exhaust Cam 2 Actual**	

Increase engine speed to 1500 rpm and observe the desired and actual readings on all four cams.

4. Record the largest difference (and which cam) below.

_____

5. If one cam was not moving as the others do, list all the possible causes below.

_____

_____

6. How do you identify the VVT actuators on the engine?

_____

7. Disconnect one of the actuators until a DTC sets. What code was stored?

_____

8. Using the Cam to DTC chart in your Student Workbook, what identifies the actuator that you disconnected?

_____

Turn the engine off and clear DTCs.

9. Was any abnormal movement observed?

_____

Return the vehicle to its original condition.

TASK FOUR: MULTIAIR SYSTEM OPERATION AND DIAGNOSIS

In this activity, you will observe MultiAir data values and view the scan tool screens associated with the MultiAir system.

Using service information, your Student Workbook, and the classroom vehicle, answer the following questions.

Connect the wiTECH™ 2.0 scan tool to the vehicle and start a diagnostic session. Access the PCM Data screen. Create a custom template that includes all MultiAir-related parameters that are available on wiTECH™ 2.0. Start and run the engine. Record the readings. While monitoring the data, disconnect the cylinder number 1 MultiAir solenoid valve connector.

1. How does the engine performance change with the MultiAir solenoid disconnected?

_____

2. Disconnect the MultiAir solenoid for cylinder #3. How does the engine performance change?

_____

Shut the engine off.

3. Will the engine restart with the #3 solenoid unplugged?

_____

Now unplug #1 solenoid.

4. How does the idle change?

_____

5. Will the engine restart? What does it sound like when you attempt to start it?

_____

Reconnect all connectors.

6. With the key ON/engine off, use the scan tool to operate each actuator and record the differences between the four cylinders.

_____

7. Did all of the solenoids actuate?

_____

8. Use service information Section 09 - Engine > 1.4-Liter I4 16V Turbo > Diagnosis and Testing > Engine Performance diagnostic table. List some of the symptoms that may be caused by a failure in the MultiAir system.

_____

_____

9. How long can the vehicle be stored before exhibiting a hard to start?

_____

10. Which component could function improperly or even cause damage to the cylinder head assembly if the oil viscosity was not within range?

_____

Notes:

Notes:

LESSON 3 PCM OUTPUTS (CONTINUED)

INDUCTION SYSTEM

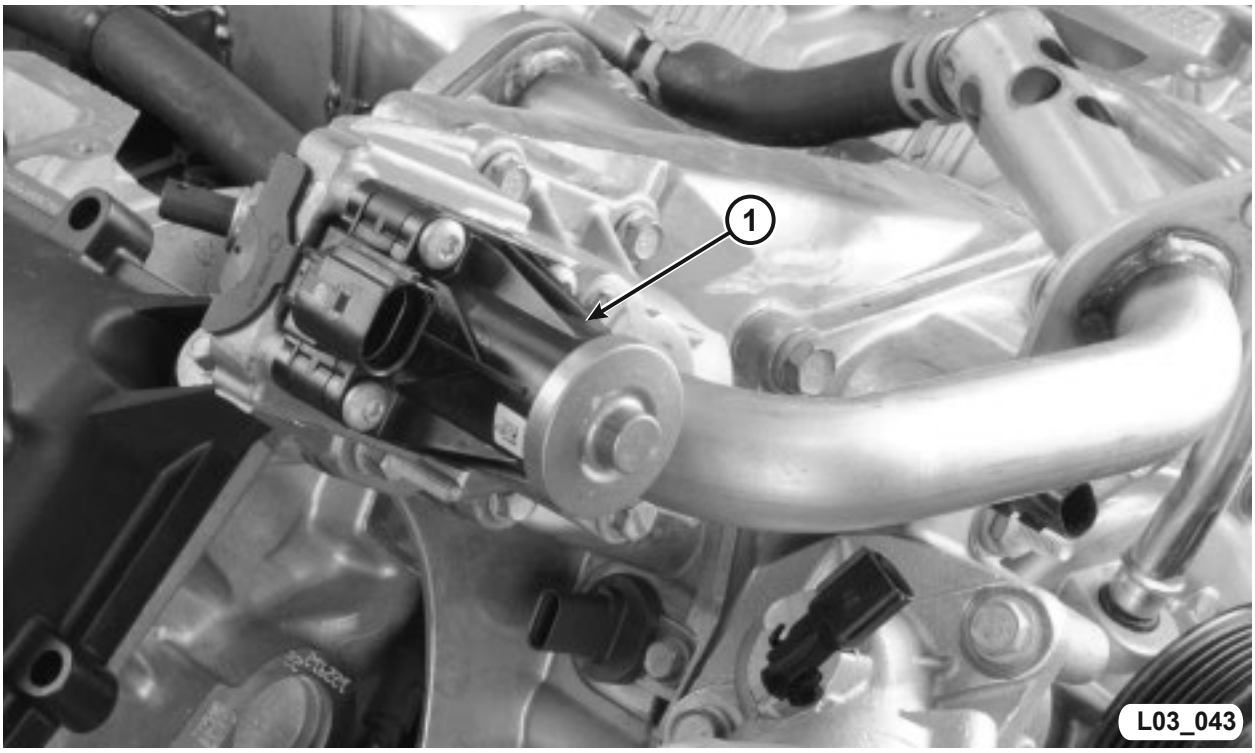

1	EGR Valve

Figure 110 Linear EGR Valve

Linear EGR Valve

The linear EGR valve controls the metering of exhaust gases into the intake manifold. The PCM uses a high-side driver to control the linear EGR valve solenoid. The PCM controls the valve position by varying the duty-cycle supplied to the solenoid. The circuit is grounded externally.

The linear EGR valve assembly also contains a three-wire potentiometer that provides valve position feedback to the PCM.

In some applications, the PCM learns the EGR effects on engine performance. As more engines equipped with variable valve timing are being used, EGR valves are not needed, due to exhaust gas scavenging from valve overlap.

If the engine has an EGR valve, it is very important to make sure there are no exhaust leaks in the gaskets or attaching components.

If the EGR valve is replaced, the PCM must be reset using the scan tool. Otherwise, a DTC may set even after the EGR valve is replaced.

Manifold Tuning Valve (MTV)

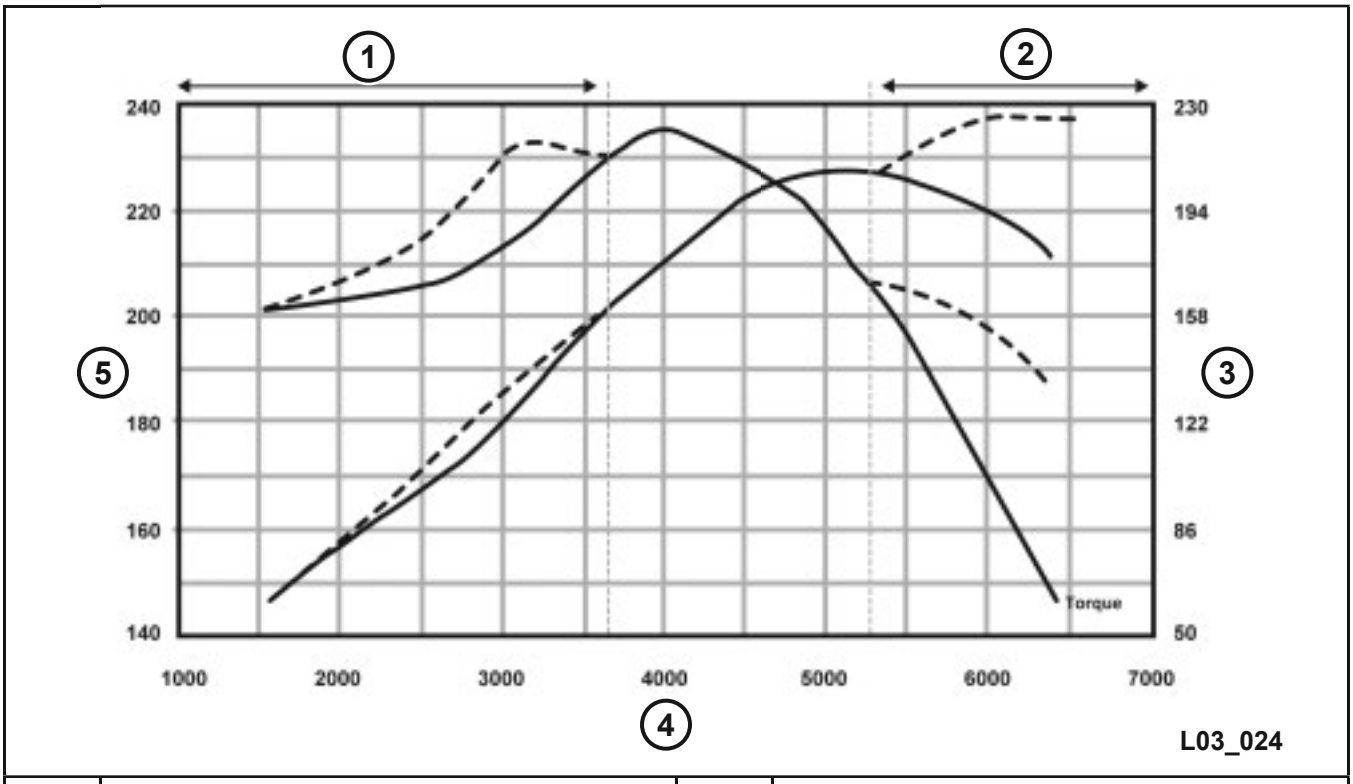

1	MTV On	4	RPM
2	SRV On	5	Torque (lbs./ft.)
3	Horsepower		

Figure 111 MTV and SRV Benefits

The manifold tuning valve (MTV) is used on vehicles equipped with an active intake manifold. Its purpose is to vary the intake manifold runner configuration to optimize torque over a wider RPM range. It is a two-state device that electrically opens and closes a passageway that connects two separate plenums within the intake manifold. A high-side driver controls the circuit, and there is an external ground.

Short Runner Valve (SRV)

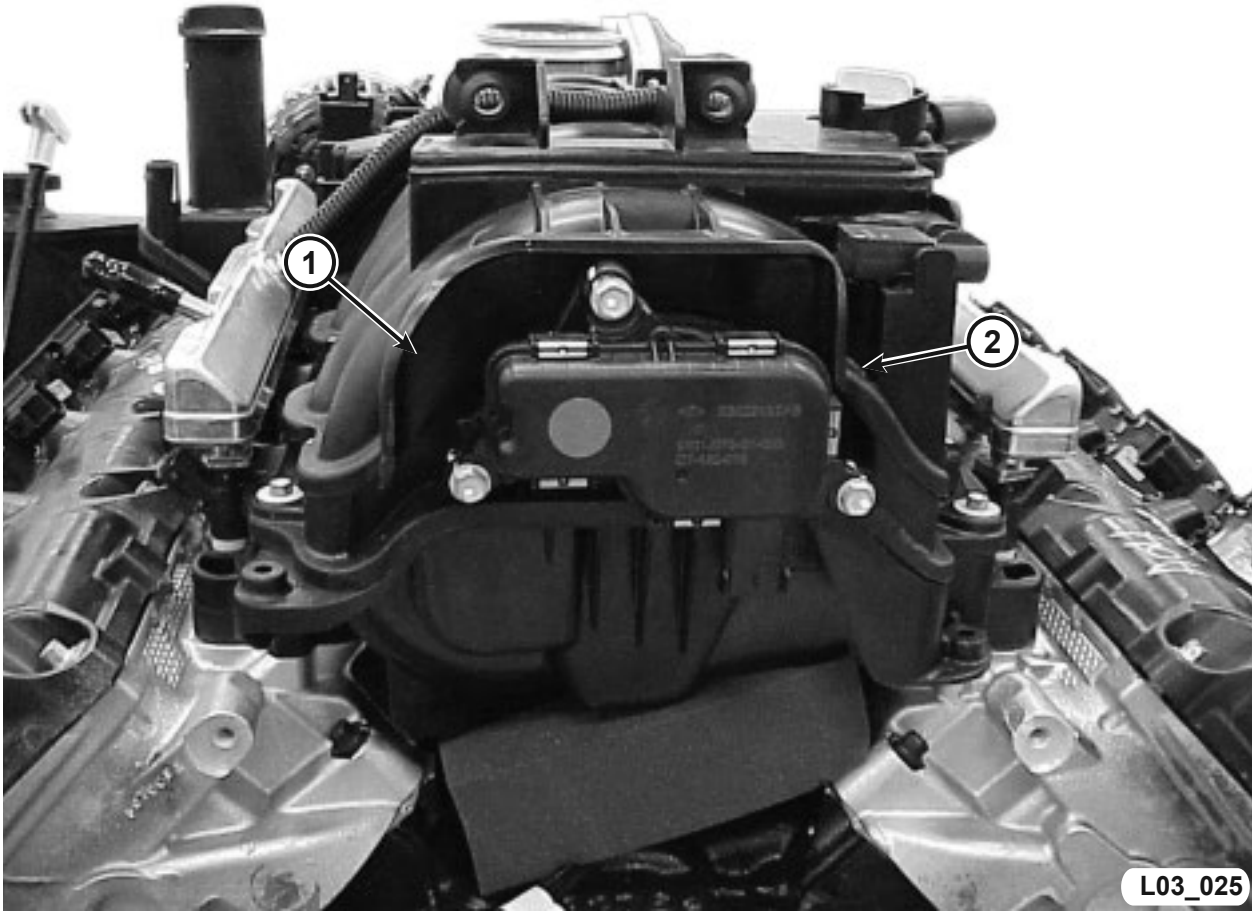

1	Intake Manifold	2	Short Runner Valve (SRV) Actuator

Figure 112 5.7 liter DS/HB Intake Manifold Rear Showing SRV

The short runner valve (SRV) is used on vehicles equipped with an active intake manifold. It optimizes the intake runner length to increase horsepower at high rpm. It accomplishes this by opening passageways that shorten the path between the air inlet and cylinders. The SRV is supplied power by the ASD relay and is controlled by the PCM via a latching, low-side driver. This circuit is either full on or full off. The SRV is actuated by an electric motor.

SRV Manifold

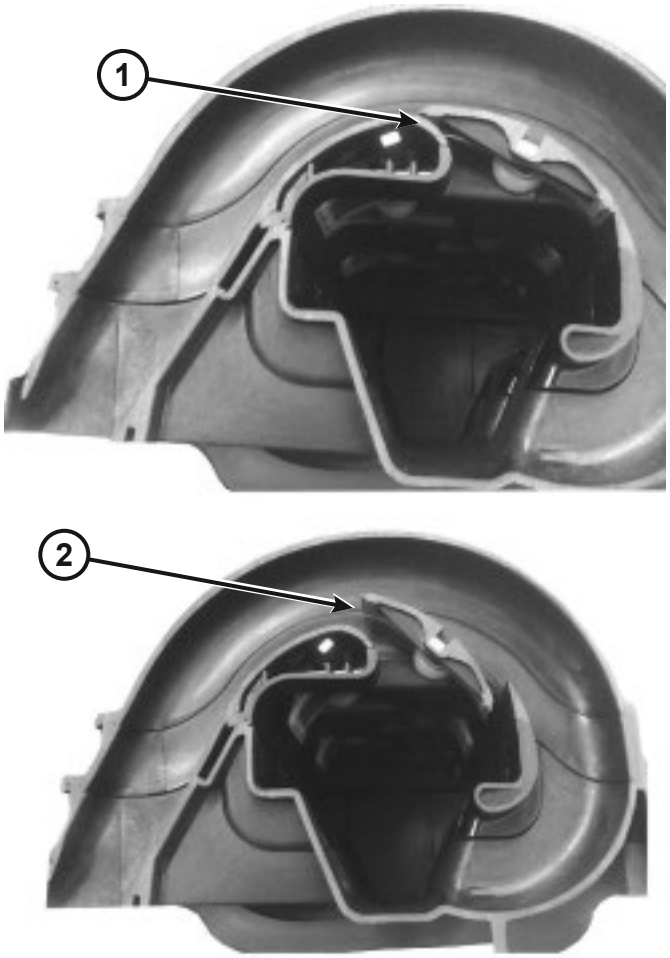

1	Short Runner Valve Closed	2	Short Runner Valve Open

Figure 113 Short Runner Valve (5.7 liter shown)

The intake manifold features a dual shaft short runner valve (SRV) system to maximize both low end torque and peak power. The SRV is bolted to the rear of the intake manifold and can be service separately from the manifold.

The SRV system operates under wide open throttle conditions to maximize engine performance. When activated by the PCM, the SRV actuates a mechanical linkage to redirect the intake airflow to eight short runners. The PCM looks for a signal feedback when the actuator is activated. If the signal feedback is not present, the PCM sets a DTC.

World Engine Flow Control Valve

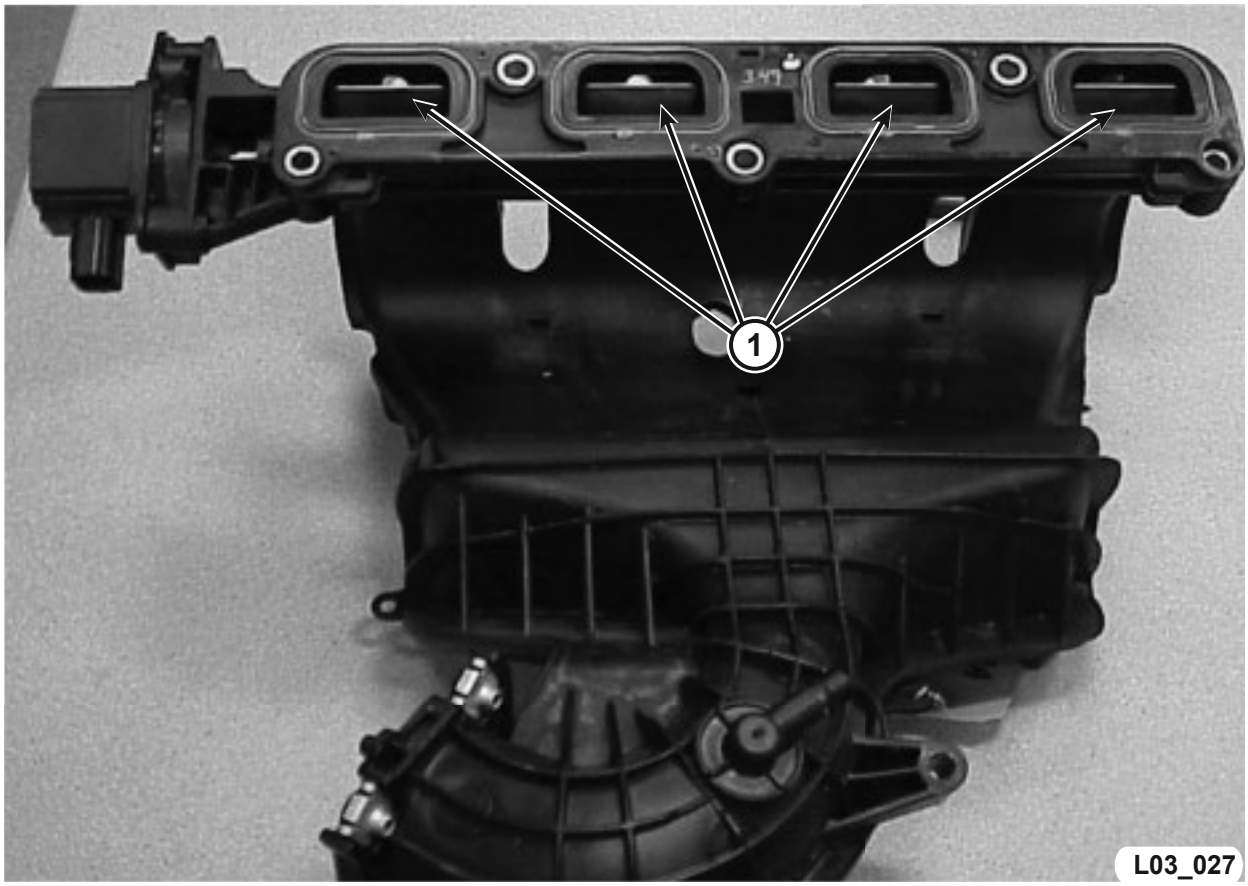

1	Flow Control Valves

Figure 114 World Engine Flow Control Valves

The intake manifold is constructed of composite material and divided into equal length runners. At the end of each runner is an intake manifold flow control valve flap. The intake manifold flow control valve actuator controls the flaps through a common shaft.

Manifold flow control valves are unique to FCA US world gas engine (WGE) vehicles. They are designed to promote maximum air/fuel atomization. The valve restricts airflow, causing it to tumble or swirl. The tumbling action helps ensure that the fuel and air mix thoroughly and burn faster. The intake manifold flow control valve and variable valve timing work together to improve fuel economy, idle stability, and emissions.

The electrically-controlled intake manifold flow control valve is located in the intake manifold at the cylinder head.

Flow Control Valve Positions

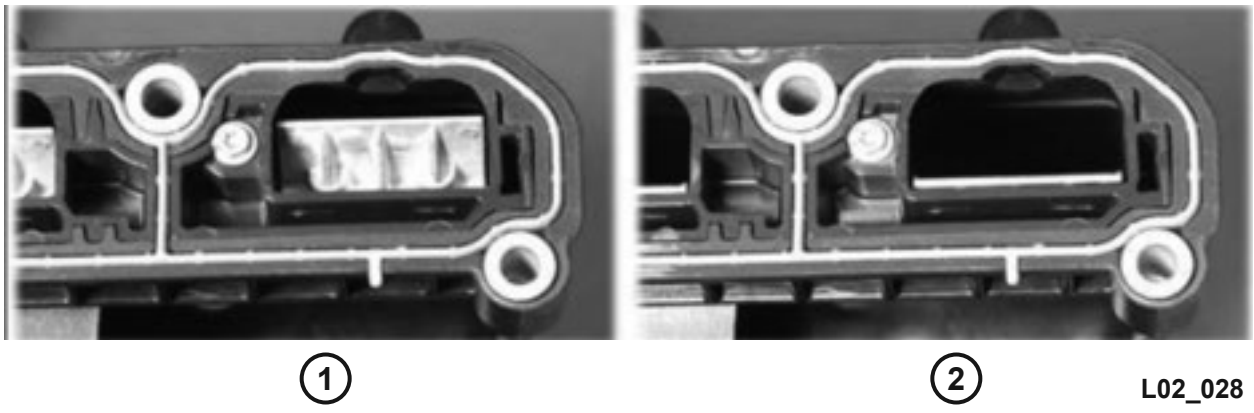

1	Valve Closed	2	Valve Open

Figure 115 World Engine Flow Control Flaps Closed and Open

The intake manifold flow control valve actuator is a two-position torque motor that is pulse-width driven by the PCM. The actuator is either energized to move the flaps out of the way to the wide-open position, or de-energized to move the flaps up to a restricted position.

The intake manifold flow control valve actuator also contains a potentiometer that provides feedback and diagnostics for the PCM.

The potentiometer circuit reports the actual position of the intake manifold flow control valve flaps. The PCM compares the actual position with the desired position to ensure that the system is functioning correctly.

The valve actuator is energized to open the at higher engine speeds (greater than 3600 rpm for the 2.0 liter, or 4000 rpm for the 2.4 liter) or at wide open throttle. The actuator is de-energized when the engine is at lower speeds than noted above and at closed or partially open throttle.

Vacuum Pump

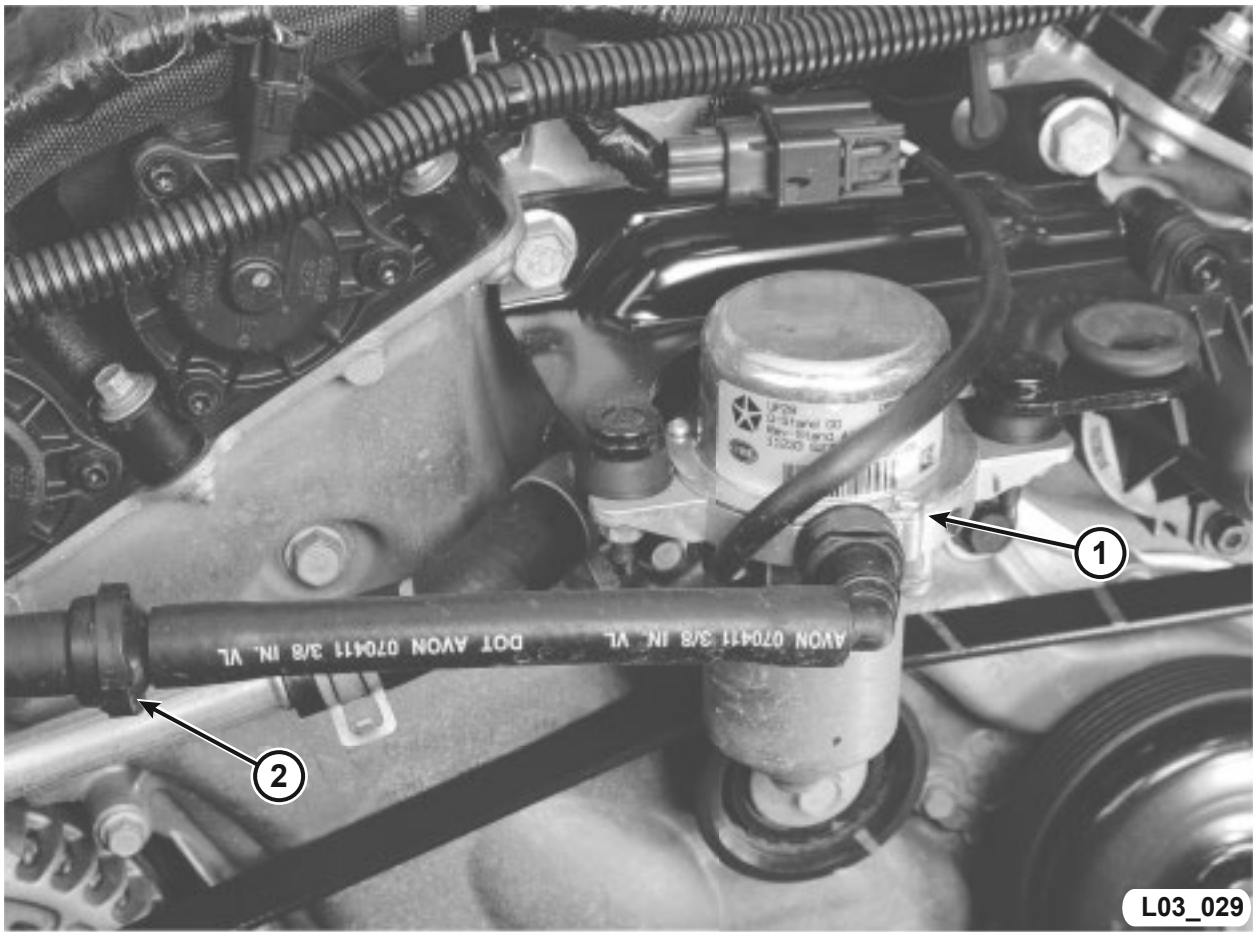

1	Vacuum Pump	2	Check Valve

Figure 116 Electric Vacuum Pump

Under some engine operating conditions, low vacuum levels may occur in the intake. On models with a 3.6 liter engine, a supplemental electric vacuum pump that is controlled by the PCM is used. Typically the electric vacuum pump is mounted to a bracket on the front of the engine.

The pump uses a vacuum sensor located at the brake booster, as the primary input for pump activation. The manifold absolute pressure (MAP) sensor is used as an additional input to control the pump.

Vehicles with the 1.4 liter engine utilize a mechanical pump attached to the rear of the head to supplement engine vacuum. The pump is driven by the camshaft.

Vacuum Pump Electronic Controls

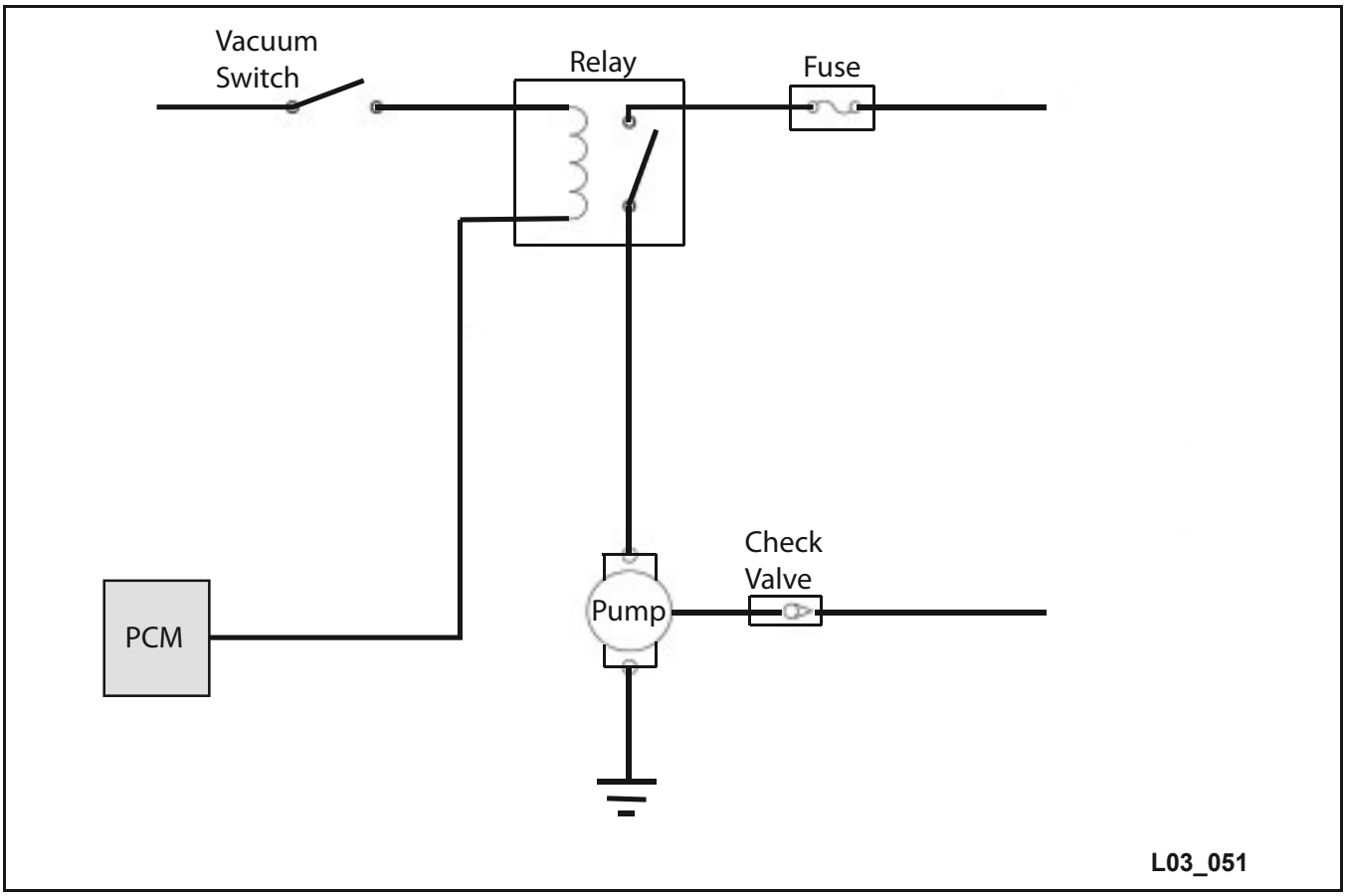

Figure 117 Typical Vacuum Pump Schematic

The vacuum pump receives power from a relay driven circuit controlled by the PCM and ignition feed.

Cooling Fan Multi-speed System

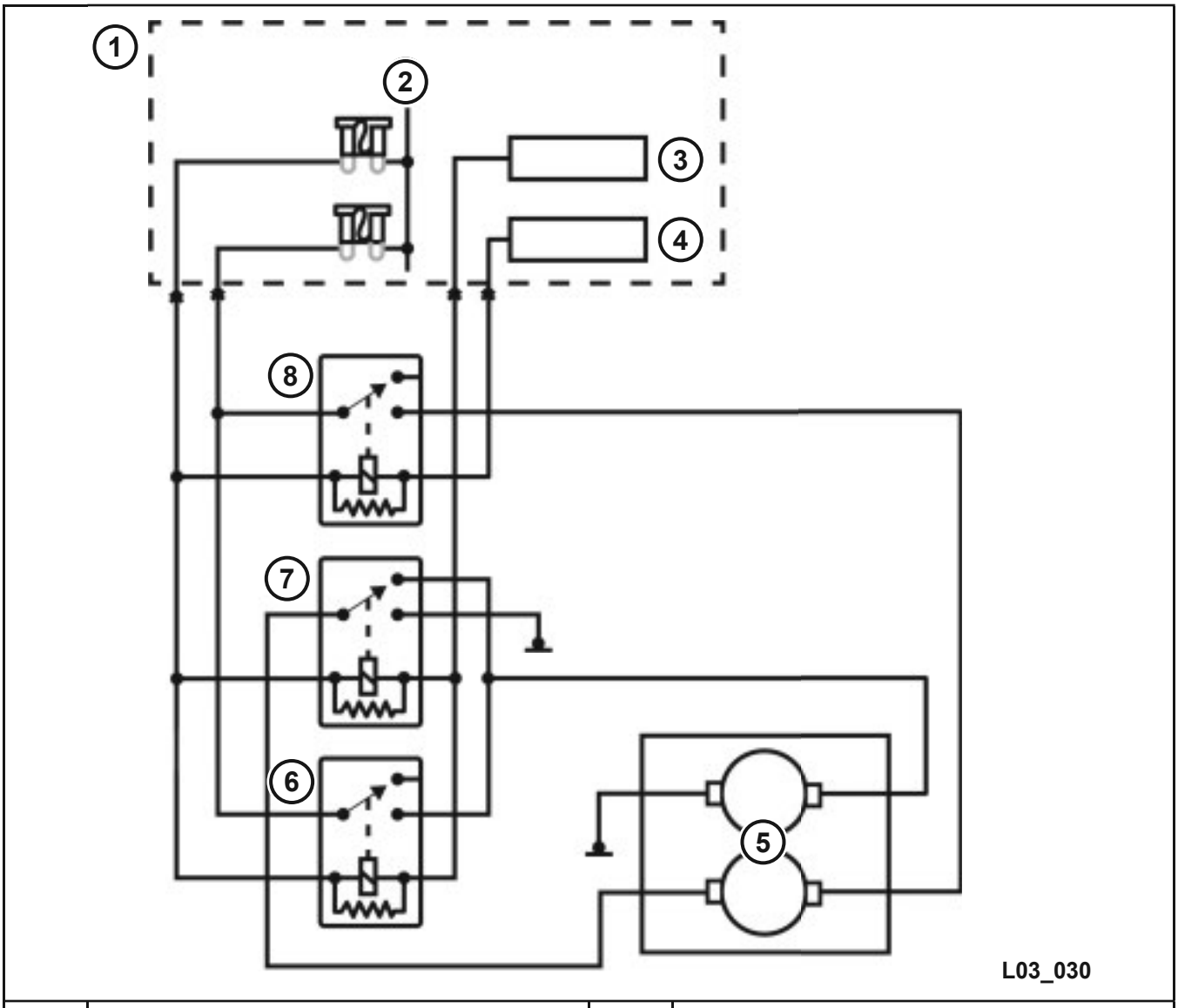

1	Control Module	5	Cooling Fans
2	B+	6	High-medium Relay
3	High-medium Low-side Driver	7	Series-parallel Relay
4	Low-high Low-side Driver	8	Low-high Relay

Figure 118 Cooling Fan Relay Control

Cooling fans can be a single-fan or dual-fan configuration, depending on the vehicle. In most cases, a series of relays are used to achieve the different fan speeds. The graphic shown is for a vehicle equipped with a TIPM and two fans, but the concept for other applications is the same. The PCM uses the ECT sensor value to determine when and how many fans are to be activated. The A/C system will also affect fan operation because it adds heat load to the vehicle's radiator.

TURBOCHARGER SYSTEM

Turbocharger

1	Turbocharger

Figure 119 Typical Turbocharger

A turbocharger is an exhaust-gas driven air pump that consists of two sections: a turbine section and an impeller section. The turbine and impeller are mounted to a common shaft and spin together. The turbocharger delivers a pressurized charge of air to the engine's cylinders. The increased oxygen content allows more fuel to be burned in the engine, increasing power output.

The turbocharger uses exhaust gases to drive the turbine. Hot exhaust gases exiting the engine are routed to the turbine housing where they expand, causing the turbine to rotate.

The impeller side of the turbocharger is driven by the exhaust gases, compressing the intake air. The exhaust gases and intake air do not come into contact with each other within the turbocharger. The compressed air charge then flows through an intercooler, reducing the temperature of the air charge before reaching the intake manifold.

A wastegate allows exhaust gases to bypass the turbine and flow directly into the exhaust, allowing turbine speed to decrease. The rapid reduction in the pressure created on the impeller side controls the boost output, preventing overpressure situations that could damage the engine.

Wastegate Control

1	Wastegate Control Solenoid

Figure 120 Wastegate Control Solenoid

The base turbocharger boost pressure is managed by the mechanical wastegate. The wastegate is a mechanical valve that, when opened, allows exhaust gases to bypass the turbine. The wastegate is spring-loaded in the closed position. Boost pressure is applied to a diaphragm that works against the spring pressure of the wastegate. When the force created by the boost pressure exceeds the spring force in the wastegate, the valve opens. This limits boost pressure by limiting the speed of the turbocharger. The wastegate solenoid is pulse-width modulated (PWM) by the PCM and is located between the compressor and mechanical wastegate. When opened by the PCM, the wastegate solenoid bleeds boost pressure away from the mechanical wastegate; this allows the PCM to increase boost pressure to a level higher than would be allowed by the mechanical wastegate alone.

The system operates as follows:

- Boost pressure is supplied to the wastegate solenoid through a hose connected to the compressor side of the turbocharger.
- The powertrain control module varies the signal to the wastegate solenoid to control the amount of boost pressure applied against the wastegate.
- When more boost pressure is needed, the wastegate solenoid will direct more of the boost pressure to the clean air tube upstream of the turbocharger and less against the wastegate spring.

Boost Pressure Sensor

1	Boost Pressure Sensor

Figure 121 Boost Pressure Sensor

When the throttle blade is closed suddenly, excessive boost pressure can build up between the turbocharger and the throttlebody, which can cause damage to the turbocharger. This occurs because the compressed air created by the turbocharger has no outlet, resulting in a compressor pressure surge. The PCM detects this pressure increase via input from the boost pressure sensor. The boost pressure sensor operates like a typical three-wire MAP sensor. The PCM provides a 5-volt supply and sensor return circuit to the boost pressure sensor and receives a feedback voltage on the signal circuit.

Surge Valve

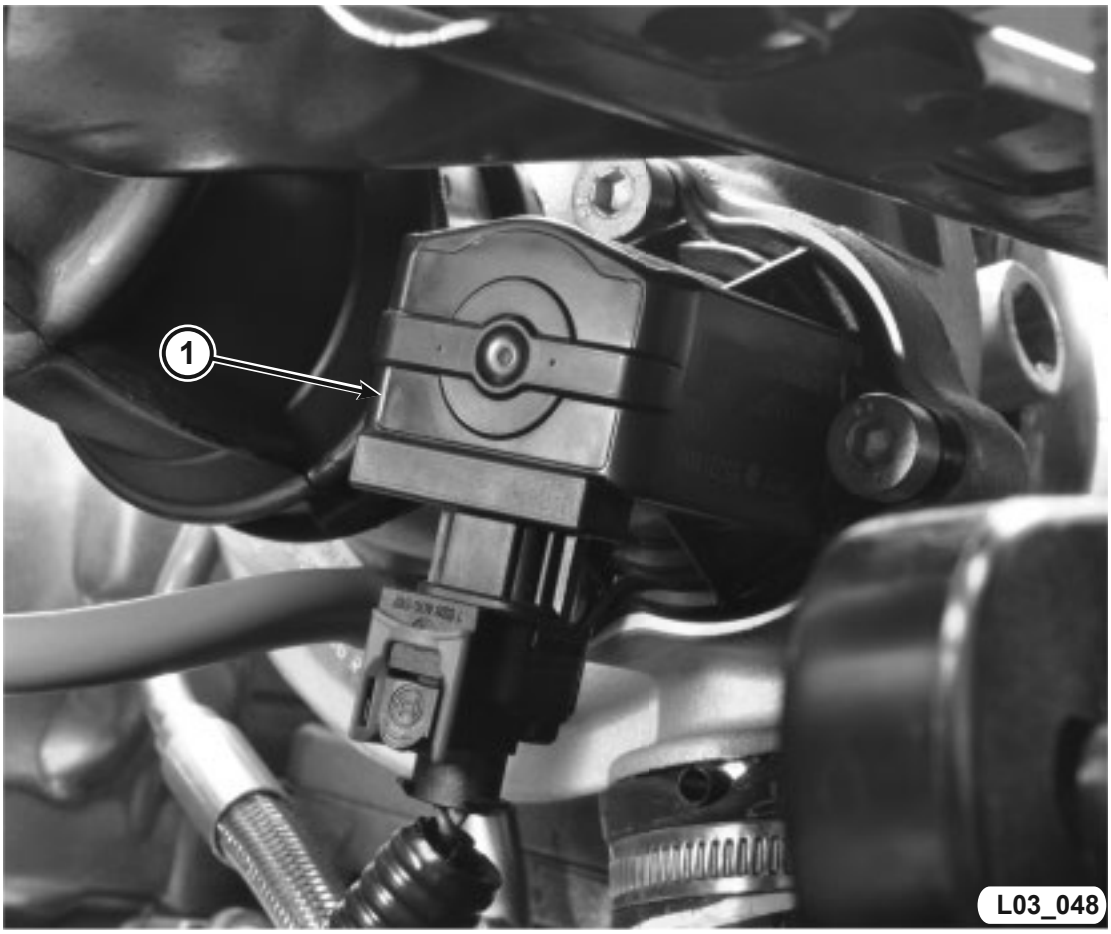

1	Surge Valve

Figure 122 Surge Valve

The turbocharger surge valve is responsible for venting the boost pressure between the turbocharger and throttlebody during sudden deceleration. The turbocharger surge valve is normally spring-loaded closed. When the PCM receives an input signal from the boost pressure sensor that the pressure is above a calibrated amount, the PCM grounds the turbocharger surge valve control circuit. This causes the valve to open, routing the excess pressure between the turbocharger and the throttlebody back to the inlet area of the turbocharger. The relief of pressure prevents compressor surge and allows turbine speed to be maintained, reducing turbo lag conditions.

After Run Pump

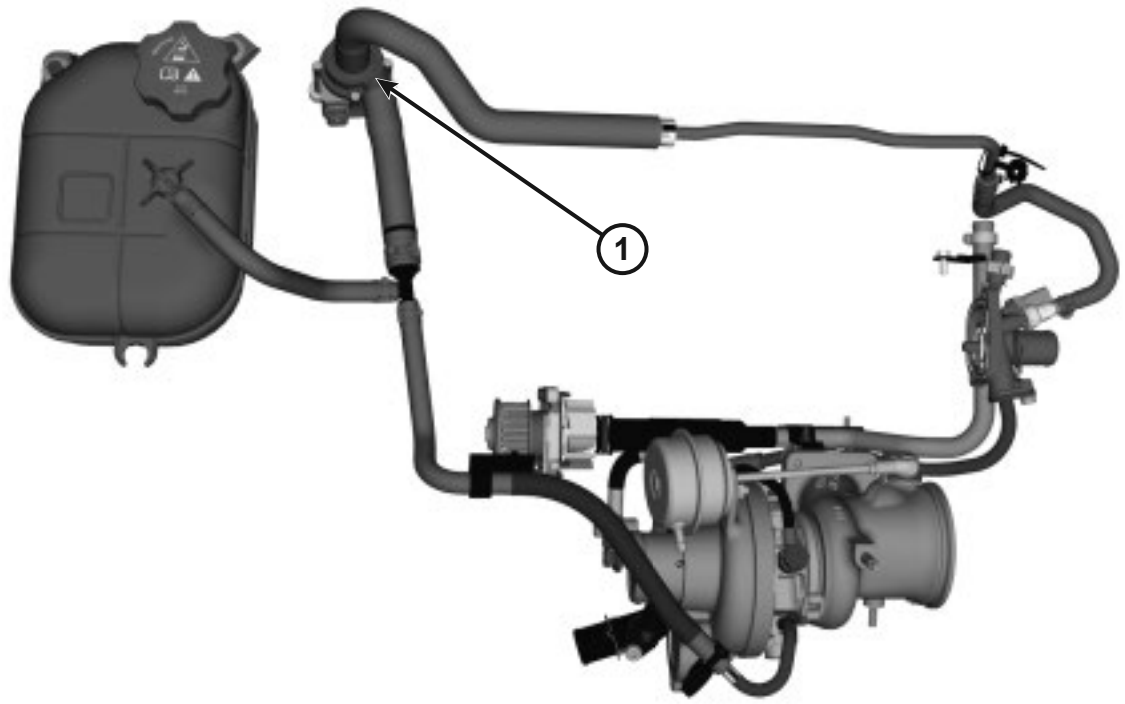

1	After Run Pump

Figure 123 After Run Pump Location

The after-run pump is free spinning during a Key ON, Engine ON condition and activated during Key OFF, Engine OFF condition for up to 10 minutes. When activated, the pump draws coolant in from the thermostat housing and sends it to the turbocharger to help prevent damage due to heat soaking.

Inputs to determine pump operation:

- Engine coolant temperature
- Throttle position
- Engine off time

The PCM latches the ASD Relay, and grounds the Electric Coolant Pump Relay Control circuit to close the relay. Battery voltage is supplied to the Electric Coolant Pump motor via the Electric Coolant Pump Output circuit. The motor is grounded through a dedicated ground circuit.

Figure 124 After Run Pump

The PCM monitors the performance of the output voltage and pump via the Electric Coolant Pump Signal circuit. Voltage passes through a bridge on the motor windings and back to the PCM on the signal circuit. If the feedback voltage on the signal circuit is above 3.5 volts when the PCM has commanded the pump on, it is determined that the relay closed and voltage output supply is present.

The PCM also monitors the performance of the pump motor and ground circuit. The PCM looks for a calculated ripple in the feedback voltage when the pump is commanded on. If the PCM does not see a ripple in the voltage feedback when the pump motor is commanded on, then it is determined that there is an open in the ground circuit or the pump motor windings.

Notes:

ACTIVITY 3 DIAGNOSE PCM OUTPUTS (CONTINUED)

TASK FIVE: TURBOCHARGER ACTUATOR AND WASTEGATE SYSTEM

In this activity, you will view the wiTECH™ 2.0 screens associated with the 1.4 liter turbocharger and its control system.

Using a hand vacuum pump, apply vacuum to the wastegate.

1. What happens when the vacuum is applied?

_____

Using the hand vacuum pump, switch the hose on the pump to apply pressure to the wastegate.

2. What happens when pressure is applied?

_____

3. What does this indicate?

_____

Locate the wastegate solenoid and remove both hoses from it. Using regulated air and a blowgun, apply air pressure to the solenoid. Using the scan tool, start a diagnostic session and access the PCM. Locate the wastegate control solenoid in the Actuator tab. Actuate the solenoid and listen for operation.

4. Describe what happens when the scan tool actuates the solenoid.

_____

_____

5. Using the scan tool, start a diagnostic session and access the PCM. Locate the after-run coolant pump in the Actuators tab. Run the pump. What were the results?

_____

6. How can you determine the pump is running?

_____

7. Locate the surge valve actuation procedure. Operate the valve. What were the results?

_____

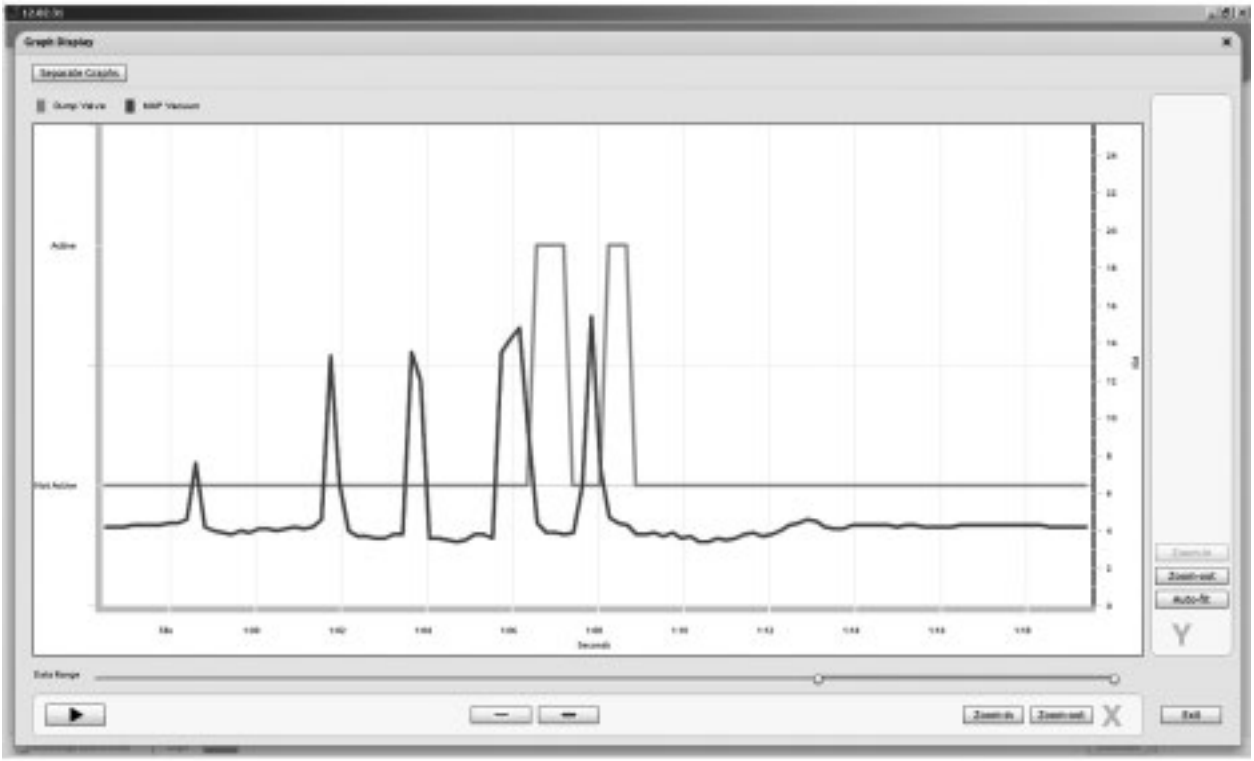

2034-101_8014

View the Actual Boost Pressure and Surge Valve values on the scan tool in the combined graph mode. Rev the engine three times: once to 1500 rpm, once to 2500 rpm, then accelerate the engine quickly until you hear the surge valve pop off.

8. How do you know the component is operating?

_____

9. Record the highest actual boost pressure value below.

_____

TASK SIX: EGR SYSTEM DIAGNOSIS (OPTIONAL)

Connect wiTECH™2.0 to the vehicle, actuate the EGR system, and monitor the specific data values called out below.

Start the engine and allow it to reach closed-loop status.

Increase the engine idle to 1000 rpm; using wiTECH™ 2.0 command the EGR to 10%.

1. What happens to the short-term adaptive values when you actuate the EGR valve to 10%?

_____

2. What causes this effect?

_____

_____

3. What happened to the short-term adaptive values when you actuated the EGR valve to 25%?

_____

4. What happened to engine operation when you actuated the EGR to 50%?

_____

Notes:

LESSON 4 SPEED DENSITY AND ADAPTIVE STRATEGIES

SPEED DENSITY

Air Flow	Fuel Modifiers	Feedback Input	Adaptives	P.W.
$\frac{RPM}{Max\ RPM}$ (X) $\frac{MAP}{Baro}$ (X) Internal EGR	(X) TPS (X) ECT (X) IAT (X) Sensed B+	(X) Up O2	(X) ST (X) LT (X) Purge Vapor Ratio	= Pulse Width

L03_036

Figure 125 Speed Density Equation

Most FCA US LLC vehicles use speed density fuel control systems. This system changes fuel injection quantity based on changes in engine speed and load. Other parameters modify the basic fuel calculation. The speed density equation is a representation of how PCMs calculate fuel injector pulse-width in order to maintain a stoichiometric (14.7:1) air/fuel ratio.

Airflow

Air Flow	Fuel Modifiers	Feedback Input	Adaptives	P.W.
$\frac{RPM}{Max\ RPM}$ (X) $\frac{MAP}{Baro}$ (X) Internal EGR	(X) TPS (X) ECT (X) IAT (X) Sensed B+	(X) Up O2	(X) ST (X) LT (X) Purge Vapor Ratio	= Pulse Width

L03_036

Figure 126 Airflow Calculation

The PCM calculates engine speed (rpm) from the crankshaft position (CKP) sensor signal. The camshaft position (CMP) sensor determines which of the two companion cylinders should receive fuel and spark. Basic airflow requirements are determined by dividing the current engine speed value by the theoretical maximum (rated) engine speed. The speed density equation allows the PCM to determine the percentage of the maximum possible airflow currently entering the engine.

The manifold absolute pressure (MAP) sensor measures the pressure (vacuum) in the intake manifold to determine the level of engine load. This measurement is compared with atmospheric or barometric (BARO) pressure. The speed density equation divides MAP by BARO to determine the level of engine load.

There is always a slight lag in response from the MAP sensor itself; the PCM calculates the expected MAP value based on inputs for throttle position, barometric pressure, and IAC position, if equipped. This is part of the model-based fuel strategy, and the calculated value is called T-MAP. MAP sensor input validates the calculated value.

Exhaust gas recirculation (EGR) is used for control of oxides of nitrogen (NOx) emissions and to improve fuel economy. Exhaust gases can be metered through a valve into the intake manifold or by camshaft overlap. Exhaust gases are mostly inert; in the engine cylinder, they displace a percentage of the incoming air. Because EGR gases effectively reduce the size of the combustion chamber, there is less room for air/fuel mixture. Less air is drawn in and less fuel is needed; the PCM will compensate by reducing fuel quantity.

NOTE: Vehicles not equipped with EGR valves use a calculated value based on valve or camshaft timing. If the vehicle is equipped with an EGR valve, then actual airflow is utilized.

Fuel Modifiers

Air Flow	Fuel Modifiers	Feedback Input	Adaptives	P.W.
RPM / Max RPM (X) MAP / Baro (X) Internal EGR	(X) TPS (X) ECT (X) IAT (X) Sensed B+	(X) Up O2	(X) ST (X) LT (X) Purge Vapor Ratio	= Pulse Width

L03_036

Figure 127 Fuel Modifiers Calculation

The throttle position sensor (TPS) input informs the PCM of operating demand: such as idle (Min TPS), wide open throttle (WOT), deceleration, and the rate of throttle opening. Operator demand affects engine fuel requirements. The fuel injection pulse-width calculation includes: acceleration enrichment, deceleration fuel shutoff, WOT indicating open-loop while running, or fuel injector shutoff (clear-flood) while cranking.

The engine coolant temperature (ECT) sensor is monitored to determine initial cranking injector pulse-width and temperature compensation while the engine is running. The World engine PCM currently has two ECT sensors: one in the cylinder head and one in the cylinder block. The ECT input in the speed density equation comes from the sensor in the head.

Air density changes as a factor of air temperature and altitude. Denser air requires more fuel to maintain a stoichiometric air/fuel ratio. The intake air temperature (IAT) sensor allows the PCM to calculate the density of the incoming air and modify the speed density calculation accordingly.

The voltage applied to the fuel injectors affects how rapidly and how far the injector pintle opens. The quantity of fuel injected in a given amount of time changes with variations in voltage. Sensed B+ or sensed system voltage is monitored and used by the PCM to correct injector pulse-width.

Feedback Input

Air Flow	Fuel Modifiers	Feedback Input	Adaptives	P.W.
RPM / Max RPM (X) MAP / Baro (X) Internal EGR	(X) TPS (X) ECT (X) IAT (X) Sensed B+	(X) Up O2	(X) ST (X) LT (X) Purge Vapor Ratio	= Pulse Width

L03_036

Figure 128 Feedback Input Calculation

The oxygen sensor provides the PCM with a feedback signal for oxygen levels in the exhaust. The PCM determines the air/fuel ratio from this signal to see how well the speed density calculation has predicted fuel requirements for current engine speed, load, and other conditions.

Stoichiometric Air/Fuel Ratio

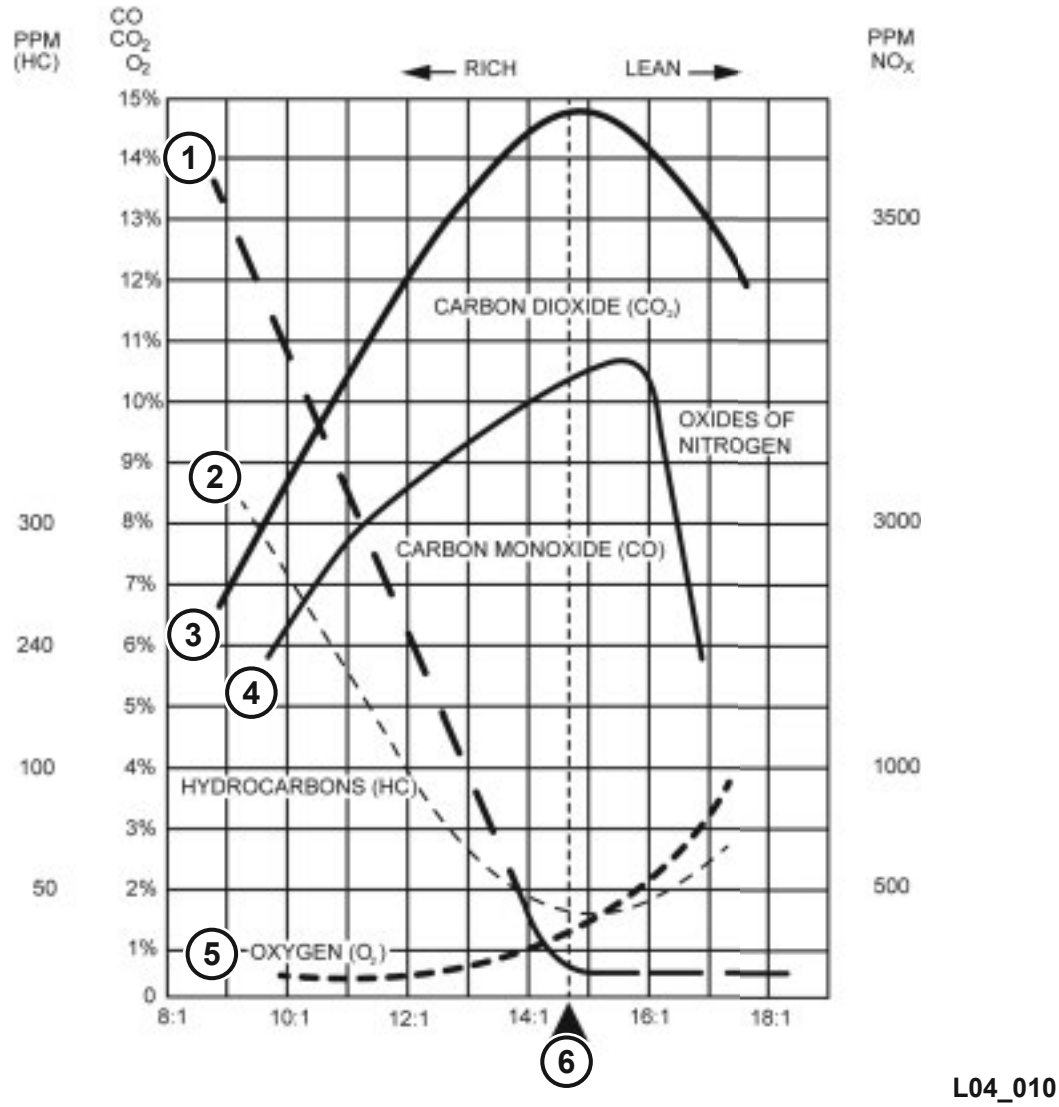

1	Carbon Monoxide (CO)	4	Oxides of Nitrogen (NOx)
2	Hydrocarbons (HC)	5	Oxygen (O2)
3	Carbon Dioxide (CO2)	6	Optimum Ratio 14.7:1

Figure 129 Stoichiometric Air/Fuel Ratio

Adaptives

Air Flow	Fuel Modifiers	Feedback Input	Adaptives	P.W.
$\frac{RPM}{Max\ RPM}$ (X) $\frac{MAP}{Baro}$ (X) Internal EGR	(X) TPS (X) ECT (X) IAT (X) Sensed B+	(X) Up O2	(X) ST (X) LT (X) Purge Vapor Ratio	= Pulse Width

L03_036

Figure 130 Adaptives Calculation

The PCM uses the speed density equation to calculate the base pulse-width required for the specific operating conditions. The goal is to maintain the stoichiometric air/fuel ratio of 14.7:1. At this ratio, all vehicle tailpipe emissions are reduced to their most manageable levels and the catalytic converter gets what it needs to be efficient.

When the fuel system goes into closed-loop operation, there are two adaptive memory programs that begin to operate. The PCM operates these two fuel correction programs to modify fuel delivery based on oxygen sensor feedback. These two programs are:

- Short-term adaptive
- Long-term adaptive

Long-term Adaptive

After the vehicle has reached full operating temperature, the correction factors generated by short-term adaptive are stored in long-term adaptive or long-term fuel trim (LTFT) memory cells. These long-term values allow the short-term adaptive value to be brought back close to zero. After this correction factor is stored in memory, it is used by the PCM under all operating conditions, open-loop and closed-loop.

The main function of long-term adaptive is to make fuel corrections that allow short-term adaptive to maintain a value near zero. In order to maintain correct emissions throughout all operating ranges of the engine, a cell structure based on engine rpm and engine load measured by MAP vacuum is used.

There are 26 cells total; two of the cells are used only during idle as determined by TPS and park/neutral switch inputs. The other 24 cells each represent specific off-idle manifold pressure and rpm ranges.

Short-term Adaptive

Short-term adaptive, or short-term fuel trim (STFT), is an immediate correction to fuel injector pulse-width. It is an immediate response to an oxygen sensor signal that is switching high or low. Short-term adaptive begins functioning shortly after the vehicle has started, as soon as the oxygen sensor is heated to operating temperature.

Short-term adaptive values change very quickly and are not stored when the ignition is OFF. The maximum range of authority for short-term adaptive is ±33%.

Open-loop Operation

The PCM operates in open-loop during a cold start, when the oxygen sensors are below 349 °C (660 °F), and also when the engine is operated at wide open throttle (WOT). In open-loop, the PCM ignores the oxygen sensors and performs air/fuel ratio adjustments based on pre-programmed values and inputs from other sensors.

Closed-loop Operation

In closed-loop operation, the PCM monitors oxygen levels in the exhaust and makes air/fuel ratio adjustments based on upstream oxygen sensor feedback to achieve the 14.7:1 stoichiometric ratio. All tailpipe emissions (HC, CO, and NOx) are at their best balance when this fuel ratio is maintained.

Purge Vapor Ratio

Purge vapor ratio is the proportion or concentration of fuel (hydrocarbon) vapors in the evaporative system purge flow. If purge flow contains a high ratio of HC vapors, less fuel from the injectors is required. Purge can be used to correct a lean condition in some instances. Purge flow is only enabled when short-term fuel trim is active. Beginning with NGC and later PCMs, the long-term adaptive correction never includes purge flow. Purge flow is shut off when a long-term correction is required.

Fuel Injector Pulse-width

Air Flow	Air Flow	Feedback Input	Adaptives	P.W.
RPM / Max RPM (X) MAP / Baro (X) Internal EGR	(X) TPS (X) ECT (X) IAT (X) Sensed B+	(X) Up O2	(X) ST (X) LT (X) Purge Vapor Ratio	= Pulse Width

L03_036

Figure 131 Calculated Pulse-width

The PCM uses information from all available inputs to determine injector pulse-width. This output of the PCM is constantly being adjusted to engine conditions and driver request. This command is the final result of all the parts of the speed density equation.

Short-term Adaptive Oxygen Sensor Voltage

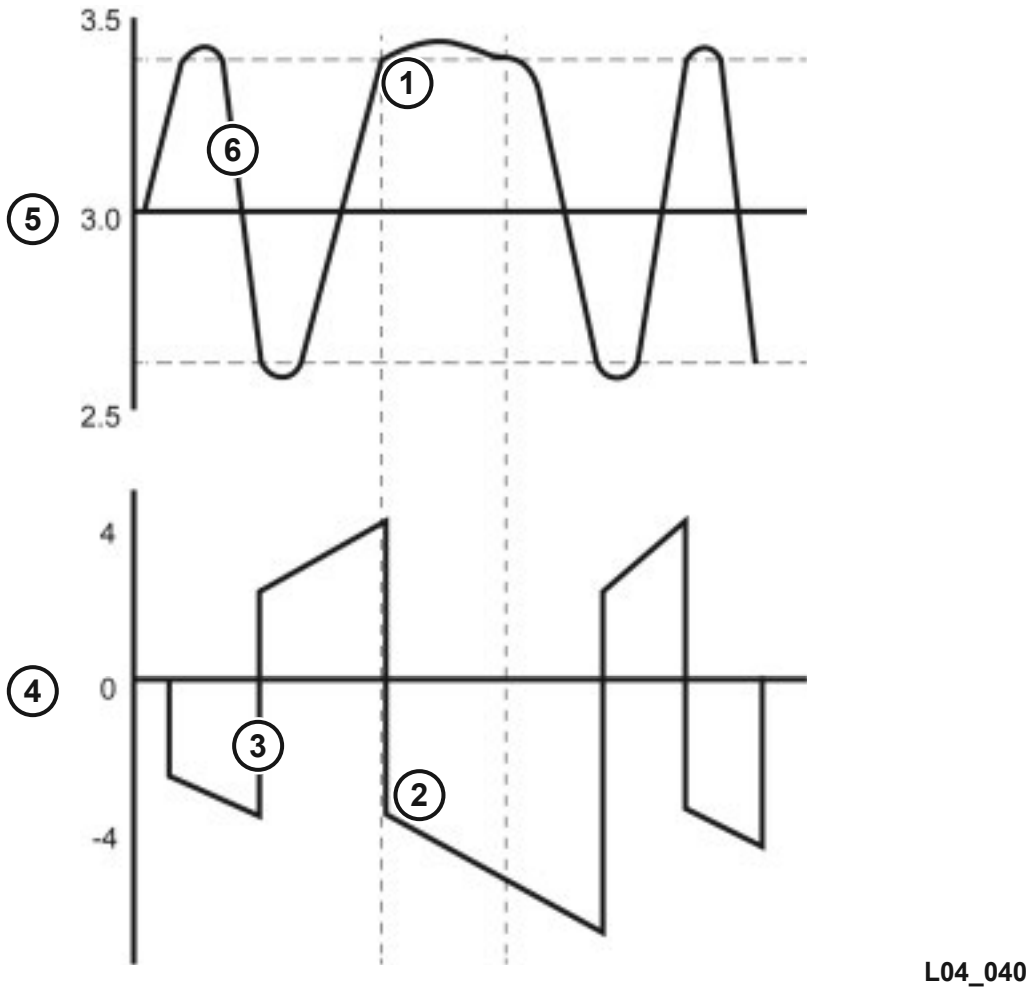

1	Oxygen Sensor Voltage Stays High	4	Percent of Change
2	Short-term Drops to Compensate	5	Oxygen Sensor Voltage
3	Short-term Adaptive	6	Oxygen Sensor Signal

Figure 132 Short-term Adaptive vs. Oxygen Sensor Voltage

During closed-loop operation, short-term adaptive makes immediate adjustments to fuel delivery in direct response to the signal from the upstream oxygen sensor. The PCM determines air/fuel ratio by monitoring oxygen content measured by the upstream oxygen sensor.

If the upstream oxygen sensor voltage is not switching between 2.5 and 3.5V, the PCM knows that the base pulse-width calculation needs to be modified by adjusting the injector pulse-width until a switching oxygen sensor voltage is achieved. This immediate correction is known as short-term adaptive, or short-term fuel trim (STFT), and begins functioning shortly after the engine has been started and enters closed-loop operation. STFT is not retained in memory; the amount of correction created is lost after the ignition is turned to the OFF position.

The need to adjust the injector pulse-width may be a result of vehicle operating conditions, vehicle wear, or fuel quality. The maximum range of authority for short-term adaptive is ±33%.

Fuel Monitor

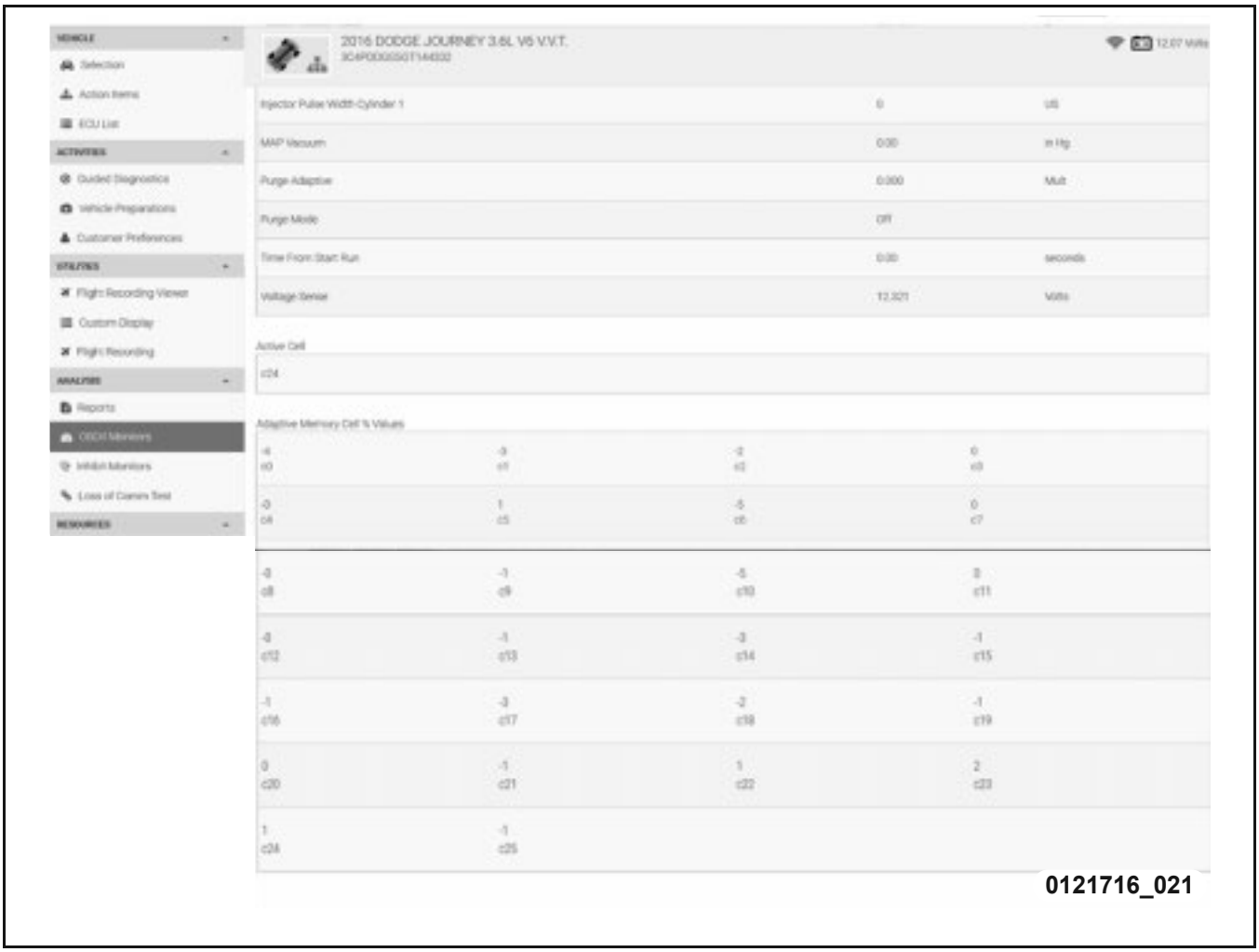

Figure 133 Adaptive Fuel Monitor Screen

After the vehicle has reached full operating temperature, short-term correction factors will be stored in long-term adaptive memory cells based on vehicle load (rpm/MAP) to allow the short-term adaptive value to be brought back to near zero. After this correction factor is stored in memory, it will be used by the PCM under all operating conditions, open-loop and closed-loop.

However, the values stored in long-term adaptive memory cells are updated only after the vehicle has entered long-term, closed-loop operation at full operating temperature. This is done to prevent any transition temperature or start-up compensation from corrupting long-term fuel correction.

The cell structure is a matrix, based on rpm and MAP characteristics, that is calibrated for each powertrain package. Each row represents a different rpm range and each column represents a different range of MAP values. In some PCMs, long-term adaptive value is maintained in memory by battery voltage; a battery disconnect will cause it to be erased. This may lead to drivability issues until the memory cells have matured again. In other PCMs, long-term adaptive value is stored in nonvolatile memory. Disconnecting the battery will have no effect on the values. Do not disconnect the battery if this information is needed for vehicle service.

Whenever components that affect engine operation are replaced, the adaptive memory should be reset. If this is not done, when the engine is started and runs in open-loop, it will use the long-term adaptive values stored while the component was malfunctioning. This could cause rough operation during warm-up after repairs. After the engine reaches operating temperature in closed-loop, the long-term adaptive values will begin to adjust as the engine is operated in each cell.

SCAN TOOL VALUES COMPARISON FOR ADAPTIVE DIAGNOSIS

Monitoring the short- and long-term fuel adaptive values can be very useful in diagnosing a rich or lean condition. Positive numbers indicate fuel is being added, and negative numbers indicate fuel is being taken away.

Purge Vapor Ratio

Canister purge is part of the speed density equation. The PCM learns the HC content within the components of the EVAP system, which allows it to predict the effect of purge flow on the final pulse-width. Purge vapor ratio is learned on every start through O2 feedback and short-term adaptive shift. The PCM operates in three different modes to learn how purge fits into this equation.

OFF (Mode 0)

This occurs shortly after the vehicle has been started and has entered short-term, closed-loop operation. During Mode 0, purge is disabled while the PCM learns what it takes to operate the vehicle at stoichiometric value without the extra load of purge vapors. This is when long-term adaptive memory values are allowed to update.

LEARN (Mode 1)

After the PCM has learned the engine's fuel requirements, long-term adaptive memory values are locked, and purge flow slowly starts to ramp in. The objective of Mode 1 is to learn the HC loading of the fuel tank and the vapor canister. This is accomplished by monitoring the effects of purge on short-term adaptive and comparing the results against the data accumulated during Mode 0. After purge loading has been learned, the vehicle enters Mode 2.

NORMAL (Mode 2)

During this mode of operation, long-term adaptive memory values remain locked and purge flow is increased to normal high-flow levels required to deplete the EVAP system of HC vapors. The PCM adjusts the injector pulse-width to automatically compensate for this extra source of fuel. Remember that the PCM learns (during Modes 0 and 1) the effect of the additional HC from purge. It then can adjust the pulse-width in anticipation of what will occur when purge is ramped up to normal levels.

Proper purge flow is achieved by adjusting the flow through the proportional purge solenoid (PPS). The PPS is monitored by the PCM on the ground side of the circuit. The PCM uses this data to regulate the opening of the solenoid to ensure proper purge flow under changing operating conditions. This is monitored by the PCM and displayed on the scan tool as P-Ad, or purge adaptive.

If the PCM determines that the HC level in the charcoal canister is below a calibrated amount (by monitoring the purge vapor ratio), purge operation will be turned off. Periodically, the PCM will re-enter the LEARN mode to determine whether there is sufficient HC in the EVAP system to again initiate purge flow. These events can occur on the same key cycle.

Purge vapor content is learned shortly after short-term, closed-loop operation begins and is factored into the speed density equation. All long-term cells represent fuel correction without purge flow. This means all long-term cells are purge-free cells.

Notes:

Notes:

ACTIVITY 4 ADAPTIVE FUEL STRATEGIES

TASK ONE: ADAPTIVE FUEL STRATEGIES

On the classroom vehicle, perform the following checks and record the results of the test.

Answer the following questions as you complete the activity.

Connect the scan tool, navigate to 1/1 and 1/2 closed-loop status. Start the vehicle, observe the monitor, and note the time it takes to go into closed-loop.

1. How long does the vehicle take to go into closed-loop?

_____

2. At what ECT temperature does the vehicle allow LTFT adjustments?

_____

Make sure purge is not active. LTFT will not update unless purge is off.

3. How will you know purge is not active?

_____

4. What is the difference between STFT and LTFT?

_____

_____

5. How do you identify which cell the vehicle is operating in?

_____

_____

6. Record the adaptive values and pulse-width for both banks (if applicable): ST, LT, and injector pulse-width.

Bank 1		Bank 2 (if applicable)	
LT		**LT**	
ST		**ST**	
PW		**PW**	

7. Use the OBDII simulator to decrease fuel pump output to create a lean condition. Start the vehicle and wait at least 10 seconds to allow the vehicle to go into closed-loop. Record the LT, ST, and pulse-width values again.

Bank 1		Bank 2 (if applicable)	
LT		**LT**	
ST		**ST**	
PW		**PW**	

8. Explain the reaction of the injector pulse-width, O2, and STFT and LTFT values.

_____

9. What DTCs, if any, are pending?

_____

Using the propane enrichment tool, add propane to the engine intake (optional). Monitor and record the ST, LT, and pulse-width.

Bank 1		Bank 2 (if applicable)	
LT		**LT**	
ST		**ST**	
PW		**PW**	

10. Explain the reaction of the injector pulse-width, O2, and STFT and LTFT values.

_____

11. What DTCs, if any, are pending?

_____

12. Did this affect both banks equally? If so what does this most likely indicate?

---

13. If both sides were not affected equally, what does this most likely indicate?

Restore the vehicle to its previous condition. Clear all DTCs.

TASK TWO: PURGE SYSTEM OPERATION AND VERIFICATION

1. Connect a scan tool and navigate to the Data tab. Start the vehicle and monitor purge solenoid activity. Is purge allowed to flow while in open-loop?

---

2. Navigate to the Actuators tab, and then select Purge Solenoid. Activate purge to 10%, switch back to the Data tab, and monitor the short- and long-term adaptives. What happened to the adaptive values when purge was activated?

Navigate back to the Actuators tab and stop purge flow. Turn the vehicle off.

3. The PCM learns the purge vapor ratio in what modes?

Notes:

APPENDIX

Acronyms

The following is a list of acronyms used throughout this publication:

8GMx	Eight Gasoline MultiAir (C = Chrysler, W and K = Worldwide)
APP	Accelerator Pedal Position
BCM	Body Control Module
CAN	Controller Area Network
CKP	Crankshaft Position
CMP	Camshaft Position
DLC	Data Link Connector
DTC	Diagnostic Trouble Code
DMM	Digital Multimeter
ECM	Engine Control Module
ECT	Engine Coolant Temperature
ECU	Electronic Control Unit
EGR	Exhaust Gas Recirculation
ESIM	Evaporative System Integrity Monitor
ETC	Electronic Throttle Control
FPCM	Fuel Pump Control Module
FTPS	Fuel Tank Pressure Sensor
GPEC	Global Powertrain Engine Controller (1, 2, 2a, and 3)
HSD	High-side Driver
IAT	Intake Air Temperature
LSD	Low-side Driver
LTFT	Long-term Fuel Trim
MAP	Manifold Absolute Pressure
NGC	Next Generation Controller
PCM	Powertrain Control Module
PDC	Power Distribution Center
PWM	Pulse-width-modulated
SRV	Short Runner Valve
STFT	Short-term Fuel Trim
TCM	Transmission Control Module
TIPM	Totally Integrated Power Module
TPS	Throttle Position Sensor
VCI	Vehicle Communication Interface

Vacuum Leaks

The electronic throttle control (ETC) system will compensate for some vacuum leaks. A vacuum leak in the intake manifold will allow air into the manifold that has not come through the throttlebody. There is no idle air control system, so the ETC system will simply adjust throttle plate opening to compensate for the leak.

ETC Diagnostics

To assist in diagnosis, use the ETC throttle follower test on the scan tool. In this mode, depressing the accelerator pedal will cause the PCM to actuate the throttle plate motor. With this test, you can verify throttle plate movement with accelerator pedal input. This ETC throttle follower test must be performed with key ON/engine off. See service information for complete testing information.

The set rpm test is also used for ETC diagnosis. This test is used to performance test the ETC system's ability to control the engine idle speed.

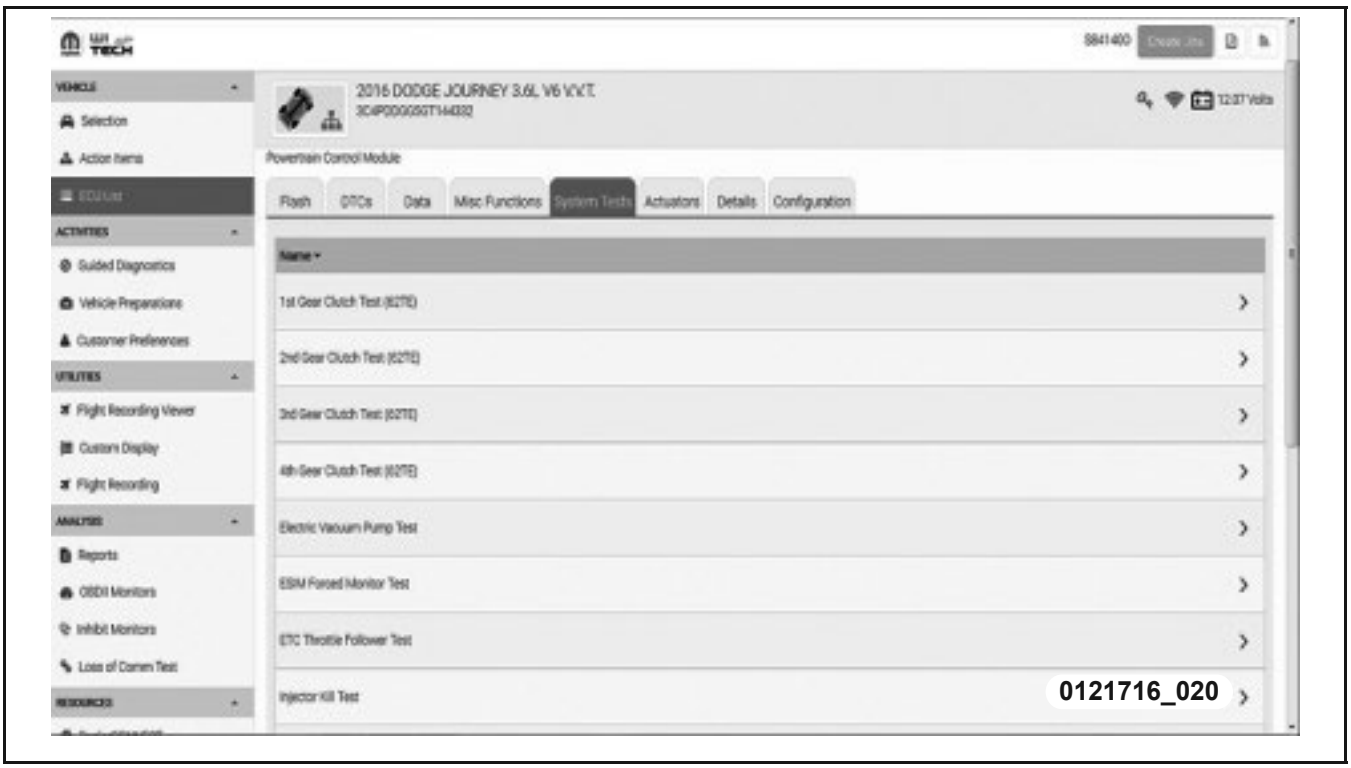

Figure 134 wiTECH™ 2.0 PCM System Test Screen

Manifold Absolute Pressure (MAP) Sensor Diagnostics

There are typically five MAP sensor diagnostic routines:

- MAP voltage high
- MAP voltage low
- No change in MAP voltage at START to RUN transfer (vacuum)
- MAP/TPS correlation (TPS values do not agree with MAP signals)
- MAP/TPS correlation (high flow, vacuum leak)

Whenever a MAP DTC is set or a MAP problem occurs, the PCM enters limp-in and uses the T-MAP substitute default value based on rpm and TPS values.

NOTE: Engine mechanical problems (such as broken valve springs) may become very apparent while monitoring the MAP sensor, especially in graph mode in wiTECH™ 2.0.

After the ignition has been cycled to the ON position, the PCM determines the barometric pressure from the MAP sensor. Unless the engine is started and there is an rpm value, the MAP sensor may not be monitored unless another key cycle is performed. This may apply on some applications while others appear to be monitored continuously.

Throttle Position Sensor (TPS) (Non-ETC)

The throttle position sensor is a three-wire potentiometer mounted on the side of the throttlebody. The TPS is responsible for determining idle position (Min TPS), acceleration, and wide open throttle (open-loop and clear-flood mode), and for influencing fuel injector pulse-width and ignition timing according to these changing requirements:

- Idle: With key ON/engine running, the PCM assumes that the lowest voltage signal value received (above the fault threshold) must be where the throttle blade hits the idle stop. This voltage signal (typically 0.5–1.0V) is recorded by the PCM as idle or minimum TPS.
- Off-idle: After the throttle is opened and the TPS signal value is approximately 0.04 volts over minimum TPS, the PCM moves into its off-idle program. Spark-scatter advance idle control is shut off and the IAC is set to act as a dashpot to prevent stalling from sudden deceleration.
- Acceleration: A rapid rise in TPS voltage within a specified time causes the injector pulse-width to increase. The amount of pulse-width increase is determined by the rate of TPS voltage rise.
- Wide open throttle (WOT): The PCM is programmed to go into open-loop whenever TPS voltage exceeds a programmed value, typically 2.5–2.7V above minimum TPS voltage. This enables the PCM to increase pulse-width at WOT to improve full throttle performance.
- Deceleration: If the TPS is closed and manifold vacuum is high while the vehicle is in motion (as indicated by the vehicle speed sensor), the PCM narrows the injector pulse-width to reduce emissions. Under some conditions, the injector pulse-width may be zero, for mileage benefits.
- WOT fuel cutoff during cranking: In case of flooding, the driver can depress the accelerator pedal to WOT so that the PCM will de-energize all injectors. This program is enabled only during cranking and when TPS voltage indicates WOT. This is referred to as clear flood mode.

Hall-effect Throttle Position Sensor

Some vehicles use a Hall-effect TPS. These Hall-effect sensors output an analog signal voltage similar to conventional TPS sensors, but the connector pin assignments are different. It may be difficult to determine this type of sensor from a standard potentiometer type sensor. They are transparent to the technician when performing diagnostics using the scan tool or voltmeter. However, they cannot be tested using an ohmmeter. The design was created to reduce wear of the standard potentiometer style sensors that may have caused intermittent drivability concerns.

Throttle Position Sensor (TPS) Diagnostics

There are three TPS diagnostic routines:

- TPS voltage too high (signal open or short to power)
- TPS voltage too low (signal shorted to ground)
- TPS voltage does not agree with MAP (rationality fault)

When observing the calculated TPS value on the scan tool while in limp-in mode, the TPS display will change as if there were no problems with the circuit. In limp-in mode, the TPS calculation will be based on rpm and MAP values, and the T-MAP value may appear unusual. MAP voltage should be observed in addition to MAP vacuum to determine if T-MAP is being displayed.

Relearning the minimum TPS may be required if the sensor is replaced. Either use the scan tool feature or cycle the ignition key from ON to OFF several times before starting the engine. The sensor should sweep clean while in graph mode or using a oscilloscope.

Fuel Level Sensor

A fuel gauge level sending unit is attached to the fuel pump module. The resistance of the sensor rheostat changes with the amount of fuel in the tank. The sensor float arm moves as the fuel level changes.

Fuel level is used by the PCM, but it is typically a data bus reading supplied by either the BCM or CCN in most cases. It affects the evaporative and misfire monitors. When the fuel level goes below 15%, the misfire monitor may be disabled.

FUEL LEVEL SENSOR

Dual Fuel Level Sensors

On vehicles equipped with a saddle-type fuel tank, there are two fuel level sensors. The two sensor signals are averaged by the appropriate body control module to determine fuel level.

Regardless of what type of fuel sensor is being used, the fuel level input is critical to EVAP diagnostics.

Fuel Level Sensor Diagnostics

The following are monitored by the PCM to check fuel level sensor operation:

- A specific amount of change in the fuel level over a set number of miles is monitored.
- The fuel level sensor signal voltage goes above the maximum acceptable value.
- The fuel level sensor signal voltage goes below the minimum acceptable value.

NATURAL VACUUM LEAK DETECTOR

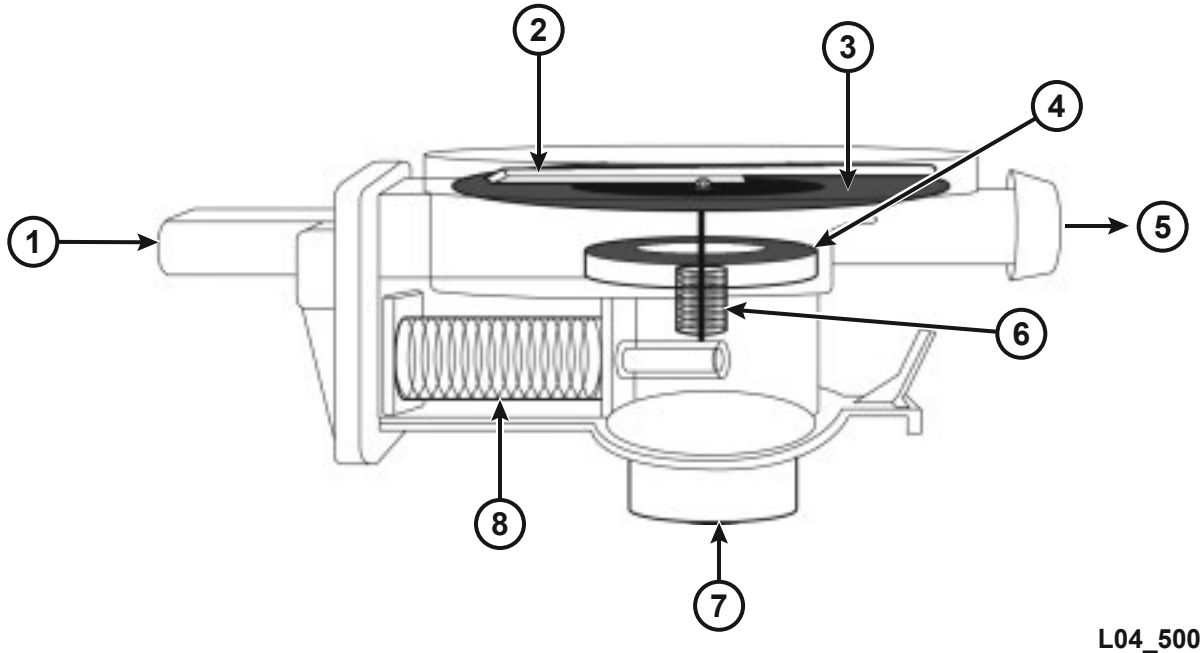

1	Electrical Connector	5	To Remote Filter
2	Vacuum Switch	6	Spring and Plunger
3	Diaphragm	7	To Canister
4	Pressure and Vacuum Relief Valve	8	Solenoid

The NVLD assembly is located on the atmospheric vent side of the charcoal canister. The NVLD assembly is designed with a normally-open vacuum switch, a normally-closed (de-energized) solenoid, and a pressure and vacuum relief valve, which is actuated by both the solenoid and a diaphragm. The normally-open vacuum switch will close when about 0.25 kPa (1 in. H2O) vacuum lifts the diaphragm. The normally-closed pressure and vacuum relief valve in the NVLD is intended to maintain the seal on the evaporative system during engine off conditions.

If vacuum in the evaporative system exceeds 0.75–1.5 kPa (3–6 in. H2O), the valve is pulled off the seat, opening the seal. This protects the system from excessive vacuum and allows sufficient purge flow if the solenoid is inoperative. A noise may be heard if this happens.

The solenoid actuates the valve to unseal the canister vent while the engine is running. The solenoid is de-energized to close the vent during the medium and large leak tests and during the purge flow check. Pressure in the EVAP system exceeding 0.12 kPa (0.5 in. H2O) opens the seal. This vents pressure from the evaporative system to permit the venting of vapors through the canister during refueling. This also allows the tank to breathe during increasing temperatures, limiting the pressure in the tank to a low level. Limiting pressure build-up allows vacuum to be achieved sooner than if the tank had to decay this pressure with declining temperatures after shutdown. The NVLD is no longer used except on the Viper.

FCA US LLC ENGINE SCOPE PATTERNS

Four-cylinder Timing Diagram

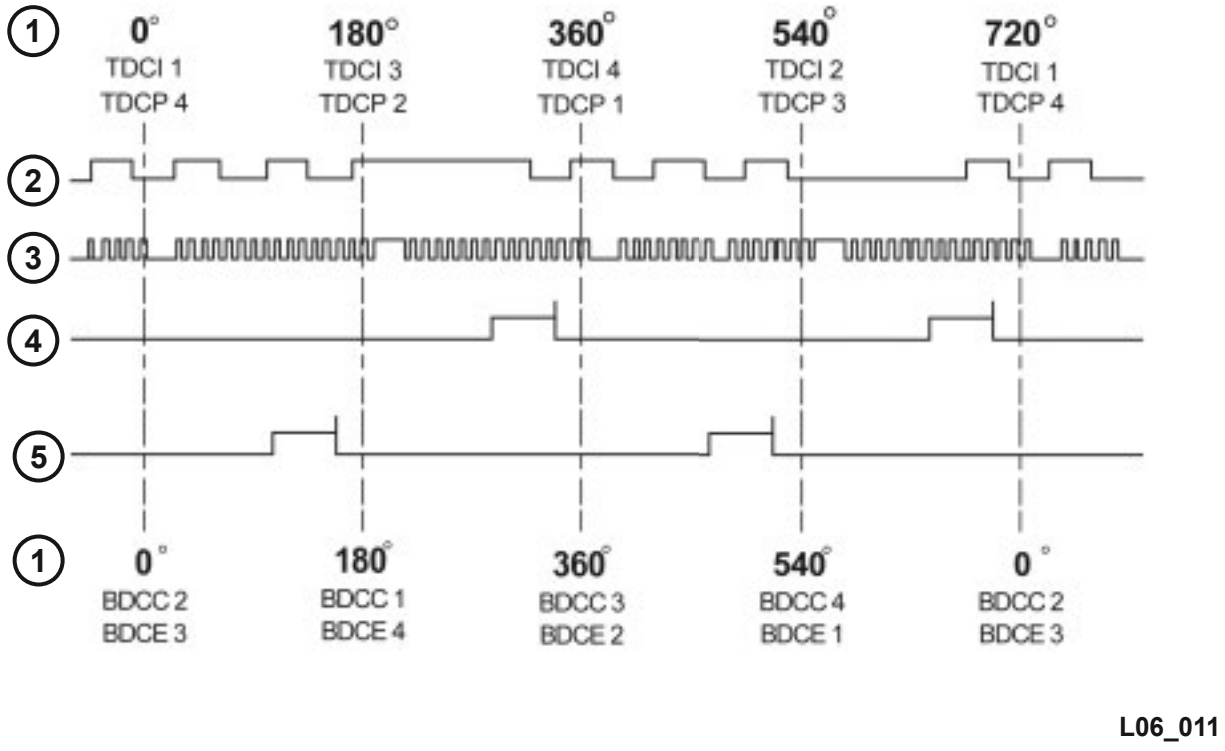

1	Crankshaft Degrees	4	Ignition Coil 1-4
2	Camshaft Position Sensor Signal	5	Ignition Coil 2-3
3	Crankshaft Position Sensor Signal		

TDCI - Top Dead Center Intake Stroke

TDCP - Top Dead Center Power Stroke

BDCC - Bottom Dead Center Compression Stroke

BDCE - Bottom Dead Center Exhaust Stroke

Six-cylinder Timing Diagram

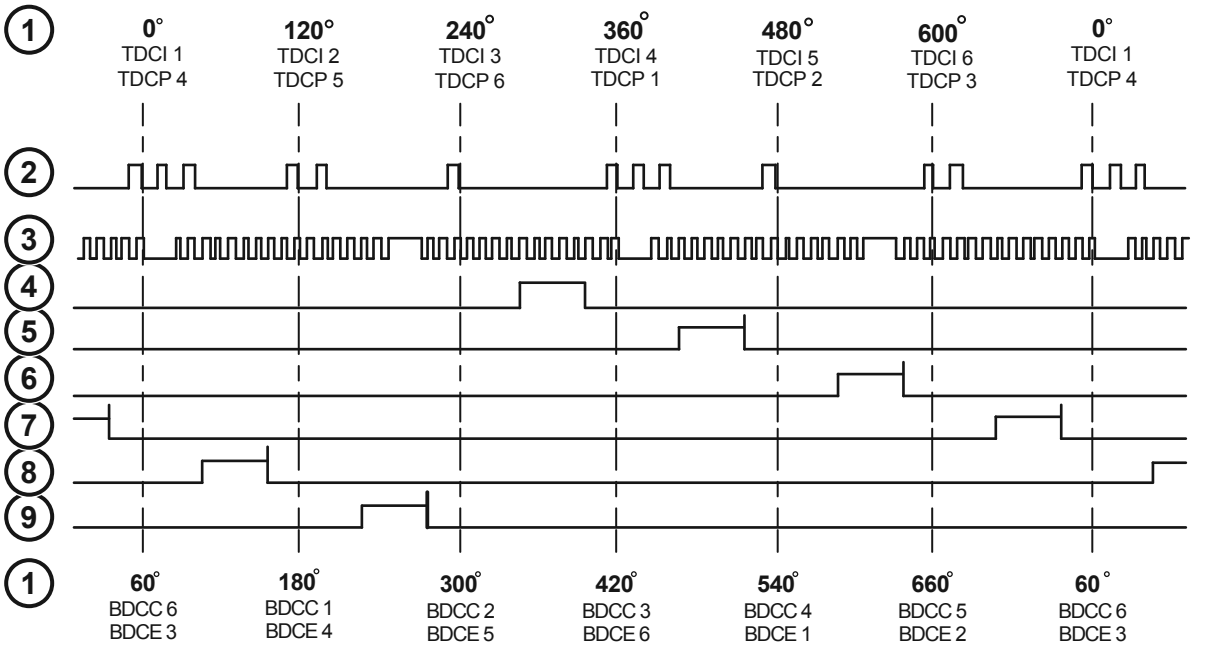

1	Crankshaft Degrees	6	Ignition Coil 3
2	Camshaft Position Sensor Signal	7	Ignition Coil 4
3	Crankshaft Position Sensor Signal	8	Ignition Coil 5
4	Ignition Coil 1	9	Ignition Coil 6
5	Ignition Coil 2		

TDCI - Top Dead Center Intake Stroke

TDCP - Top Dead Center Power Stroke

BDCC - Bottom Dead Center Compression Stroke

BDCE - Bottom Dead Center Exhaust Stroke

Six-cylinder 3.7 liter NGC Timing Diagram

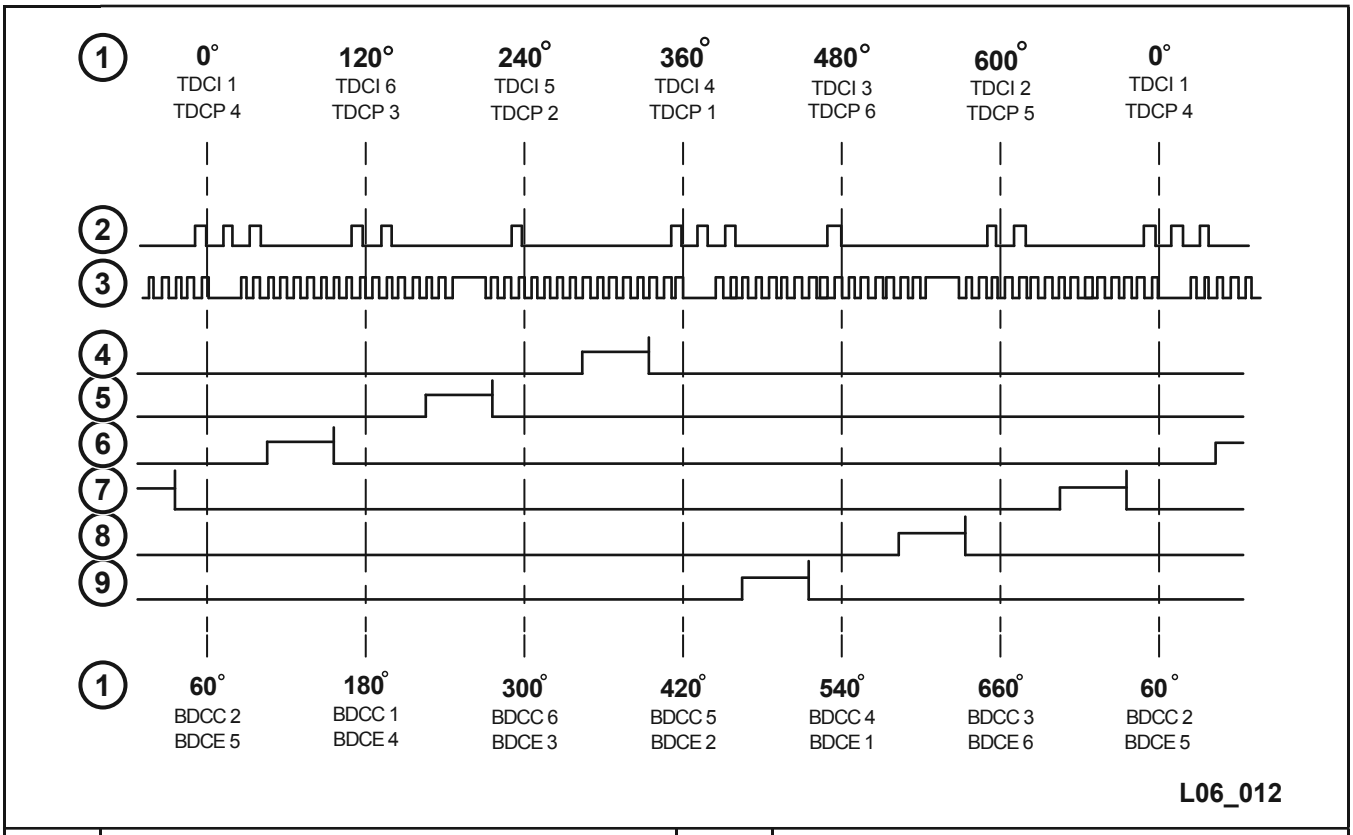

1	Crankshaft Degrees	6	Ignition Coil 3
2	Camshaft Position Sensor Signal	7	Ignition Coil 4
3	Crankshaft Position Sensor Signal	8	Ignition Coil 5
4	Ignition Coil 1	9	Ignition Coil 6
5	Ignition Coil 2		

TDCI - Top Dead Center Intake Stroke

TDCP - Top Dead Center Power Stroke

BDCC - Bottom Dead Center Compression Stroke

BDCE - Bottom Dead Center Exhaust Stroke

Eight-cylinder Timing Diagram - 4.7 liter Coil-on-plug Ignition System

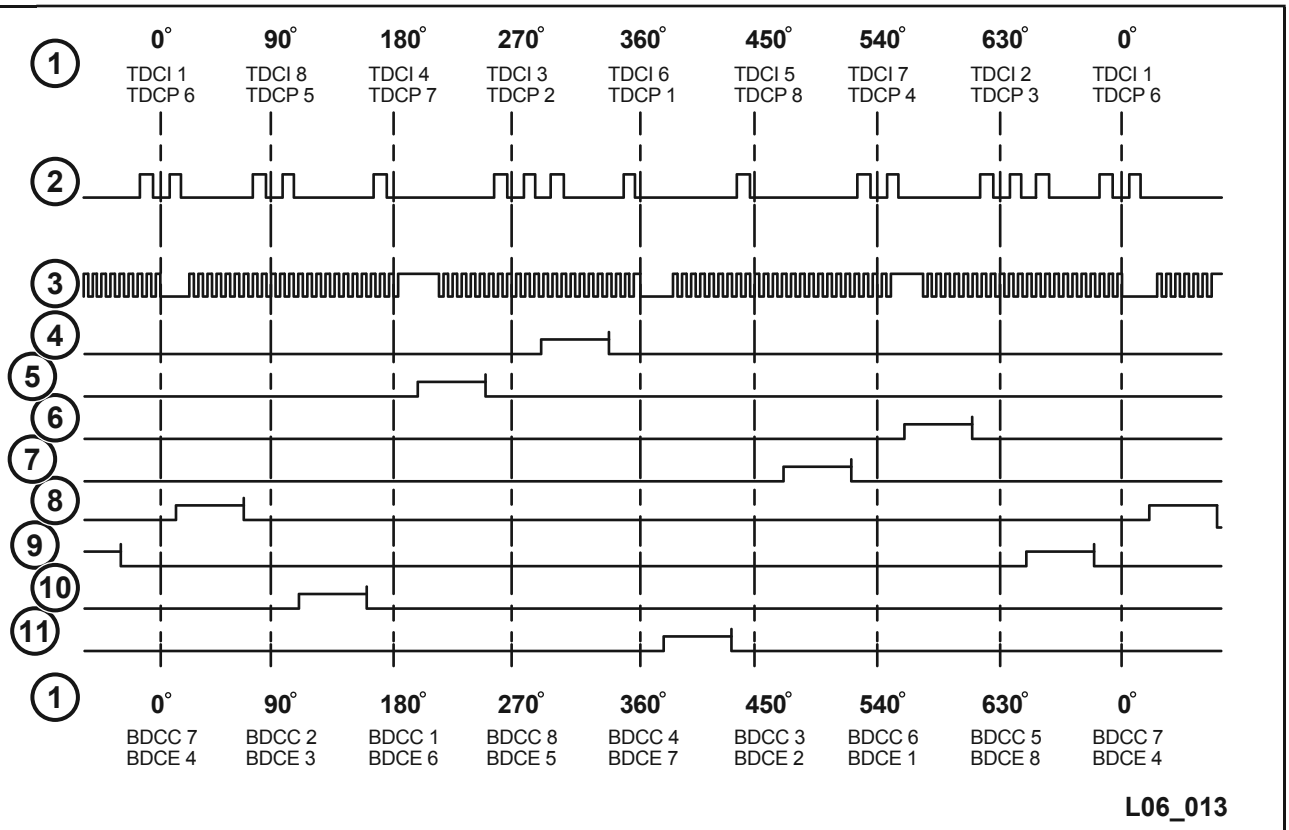

1	Crankshaft Degrees	7	Ignition Coil 4
2	Camshaft Position Sensor Signal	8	Ignition Coil 5
3	Crankshaft Position Sensor Signal	9	Ignition Coil 6
4	Ignition Coil 1	10	Ignition Coil 7
5	Ignition Coil 2	11	Ignition Coil 8
6	Ignition Coil 3		

TDCI - Top Dead Center Intake Stroke

TDCP - Top Dead Center Power Stroke

BDCC - Bottom Dead Center Compression Stroke

BDCE - Bottom Dead Center Exhaust Stroke

Eight-cylinder Timing Diagram - 5.7 liter Hemi

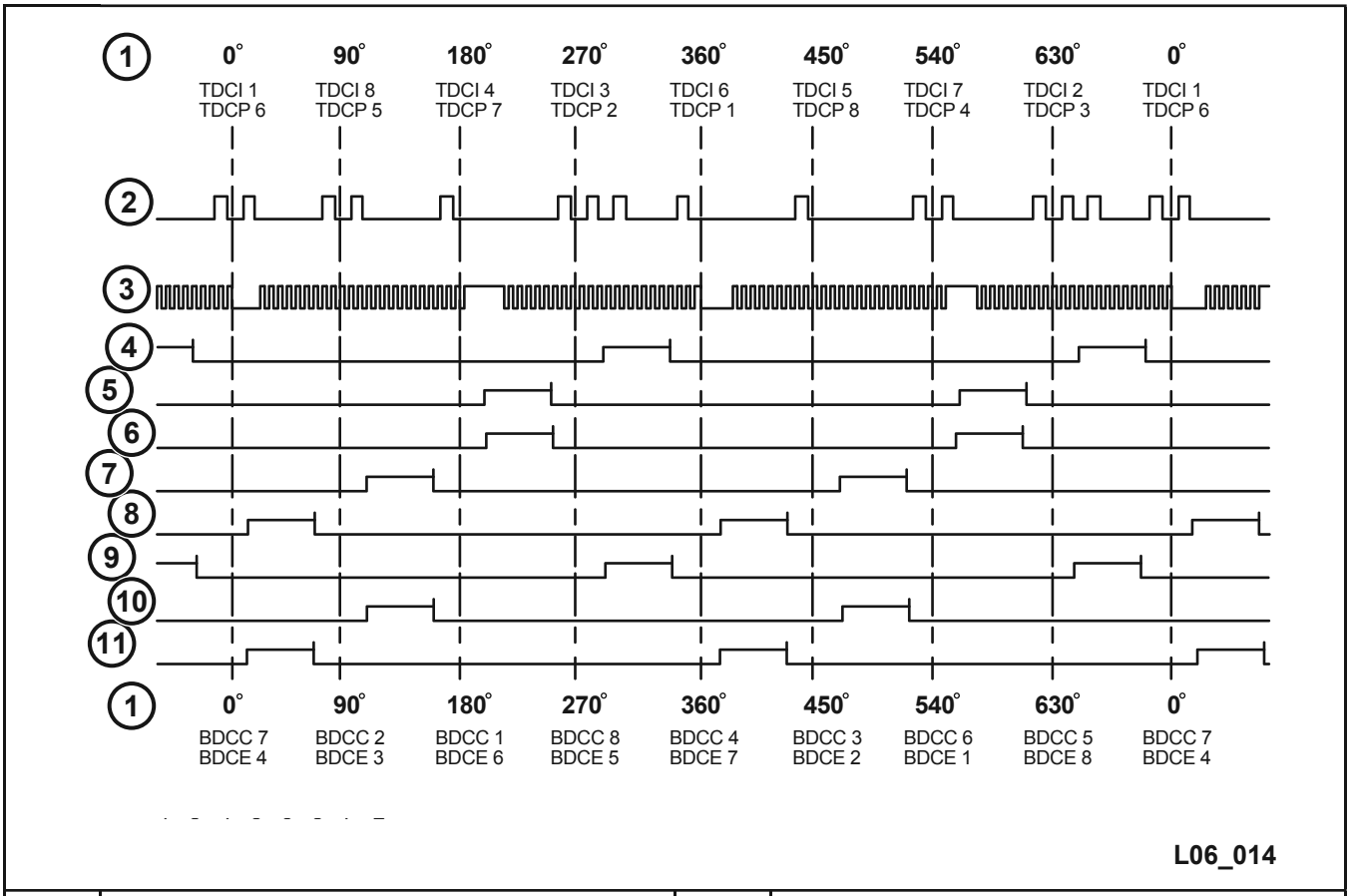

1	Crankshaft Degrees	7	Ignition Coil 4
2	Camshaft Position Sensor Signal	8	Ignition Coil 5
3	Crankshaft Position Sensor Signal	9	Ignition Coil 6
4	Ignition Coil 1	10	Ignition Coil 7
5	Ignition Coil 2	11	Ignition Coil 8
6	Ignition Coil 3		

TDCI - Top Dead Center Intake Stroke

TDCP - Top Dead Center Power Stroke

BDCC - Bottom Dead Center Compression Stroke

BDCE - Bottom Dead Center Exhaust Stroke

Eight-cylinder 5.7 liter Hemi VCT Timing Diagram

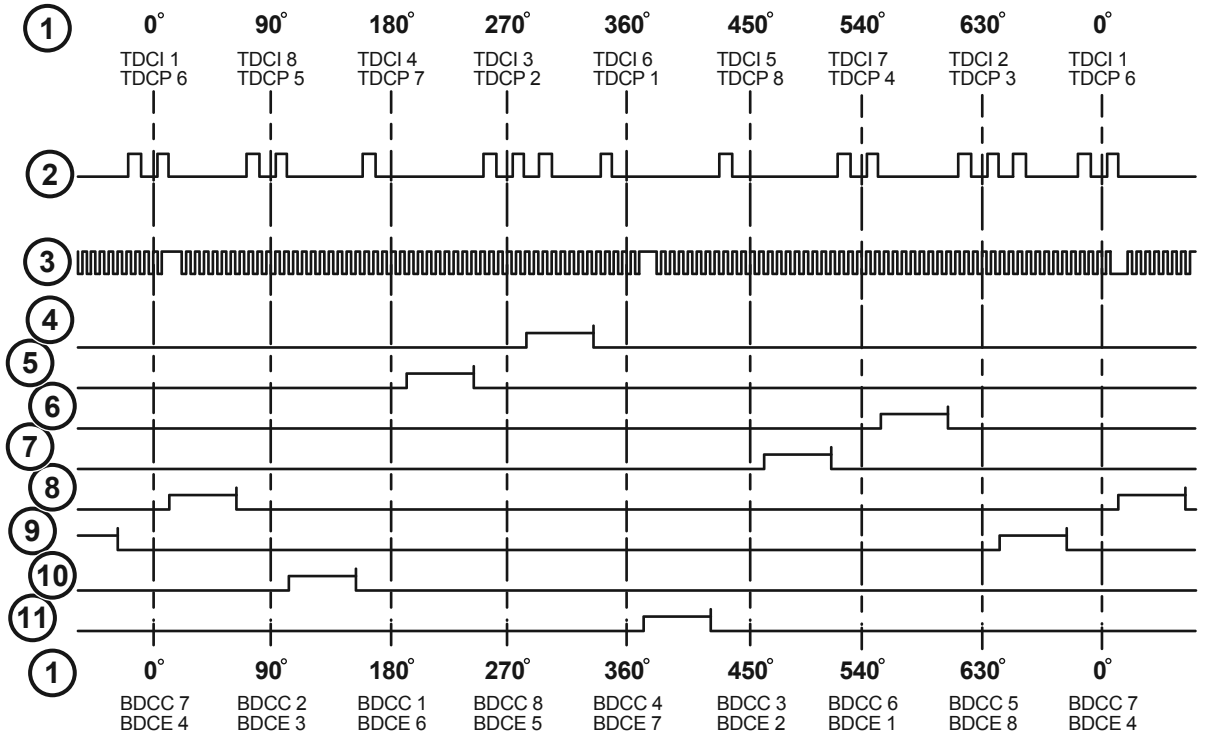

1	Crankshaft Degrees	7	Ignition Coil 4
2	Camshaft Position Sensor Signal	8	Ignition Coil 5
3	Crankshaft Position Sensor Signal	9	Ignition Coil 6
4	Ignition Coil 1	10	Ignition Coil 7
5	Ignition Coil 2	11	Ignition Coil 8
6	Ignition Coil 3		

TDCI - Top Dead Center Intake Stroke

TDCP - Top Dead Center Power Stroke

BDCC - Bottom Dead Center Compression Stroke

BDCE - Bottom Dead Center Exhaust Stroke

Six-cylinder 3.6 liter with VVT Timing Diagram

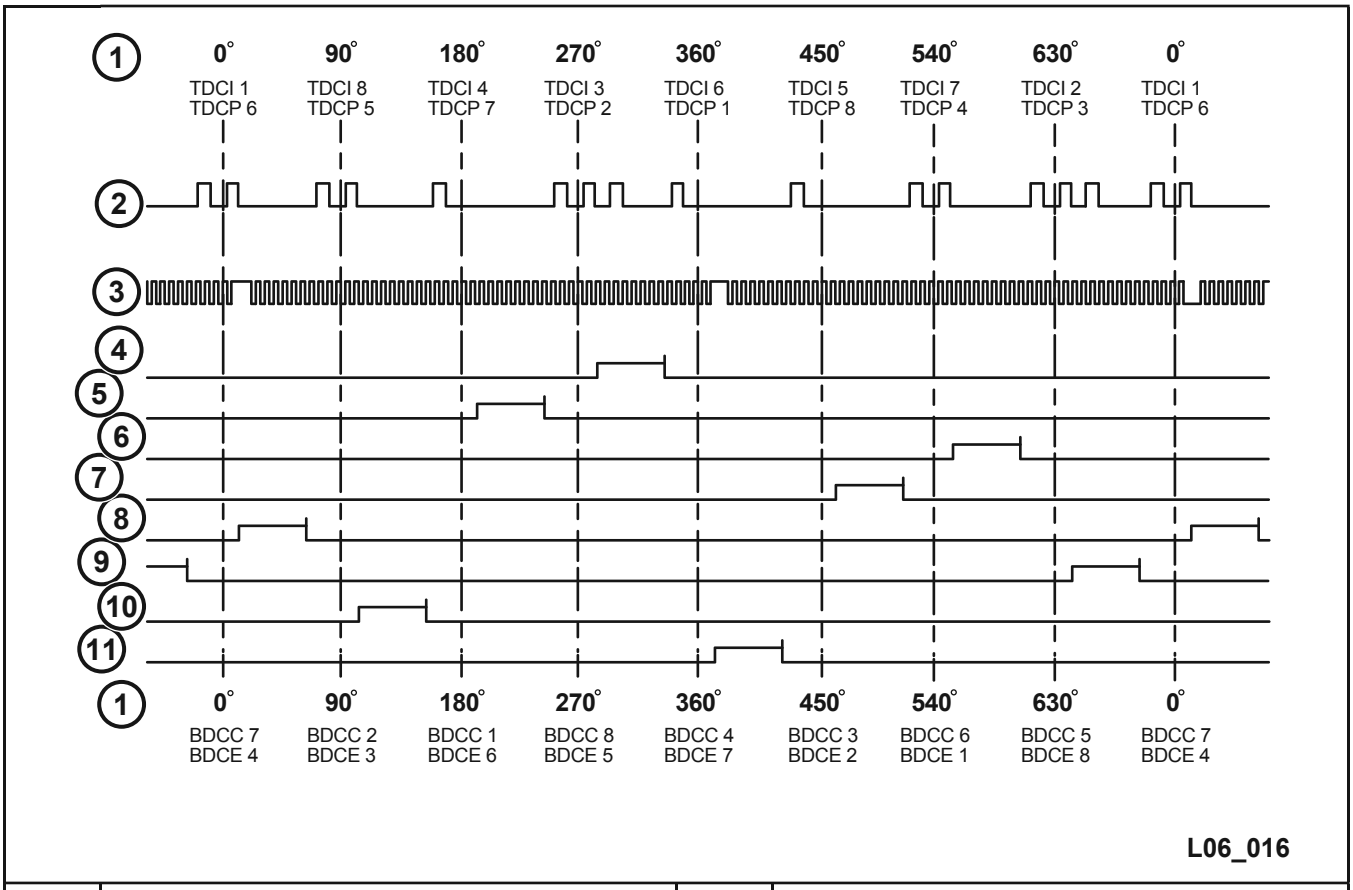

1	Crankshaft Degrees	6	Crankshaft Position Sensor Signal
2	Camshaft Position Sensor Signal	7	Ignition Coil 1-4
3	Camshaft Position Sensor Signal	8	Ignition Coil 2-5
4	Camshaft Position Sensor Signal	9	Ignition Coil 3-6
5	Camshaft Position Sensor Signal		

TDCI - Top Dead Center Intake Stroke

TDCP - Top Dead Center Power Stroke

BDCC - Bottom Dead Center Compression Stroke

BDCE - Bottom Dead Center Exhaust Stroke

Notes:

Notes:

GLOSSARY

adaptive memory factor	Short-term fuel trim value and long-term fuel trim values combined; this provides a maximum total correction of ±77% from the base fuel injector pulse-width calculation.
adaptive numerator	Learned variance in ideal and actual CKP signal; also called the target linear compensation or target learning coefficient; takes into account variations in machining of the trigger wheel and CKP sensor response.
air injection reaction system	Reduces hydrocarbon and carbon monoxide emissions by injecting air directly into the exhaust and the catalytic converter.
alternate good trip	Used in place of global good trips for comprehensive components and major monitors; if a global good trip cannot be run, the task manager counts an alternate good trip after two minutes of engine run-time where no other faults occur; the task manager counts an alternate good trip for a specific major monitor when the monitor runs and passes.
CARB readiness status	A scan tool screen indicating whether or not CARB-mandated once-per-trip monitors have run.
catalyst	A substance that enhances a chemical reaction while not being changed or used up in that reaction.
catalytic converter	Used in exhaust systems to convert pollutants into harmless substances such as water and CO2; the three-way catalytic converter oxidizes HC and CO and reduces oxides of nitrogen (NOx).
closed-loop	When the PCM uses input from the O2 sensors to make feedback corrections to the speed density equation; also see open-loop.
comprehensive components	All input and output components that can affect emissions; these components are monitored for electrical faults such as opens and shorts, and they may also be monitored for rationality and functionality.
conflict	A condition where a monitor may not be run because it would interfere with or be affected by another currently running monitor; the task manager prevents the second monitor from running until the first monitor has finished.
detonation	The spontaneous combustion of remaining air/fuel mixture in the chamber; detonation always occurs after normal combustion is initiated by the spark plug.
drive cycle	A federal emissions procedure to drive a vehicle and allow most monitors to run and perform their tests; drive cycles can specify calibrated values for engine temperature increase, vehicle speed, time, and other parameters.
enabling conditions	Operating parameters or conditions that must be met for a monitor to run; the list of conditions that may permit a monitor to run or prevent or suspend monitor operation is calibrated and varies for each package.

evaporative emissions system	Fuel vapors from evaporating fuel in the tank and from refueling is absorbed and stored in the EVAP charcoal canister; engine vacuum causes air flow through the canister during engine operation; this flow purges HC and meters it into the intake manifold.
exhaust gas recirculation	EGR systems dilute the air/fuel mixture with inert exhaust gases; recycling some inert exhaust gases back into the intake mixture can lower combustion temperatures and reduce the quantity of oxides of nitrogen (NOx) formed; EGR also improves fuel economy because less air and fuel enter the cylinders, and it reduces engine knocking.
freeze frame	Data stored from various sensors describing the engine operating conditions at the time a fault is detected.
fuel system good trip	Counted when the engine is in closed-loop, operating in a similar conditions window, and the total adaptive memory factor (short-term adaptive value and long-term adaptive value combined) does not exceed the threshold for a calibrated time; if these conditions are met, the PCM counts a good trip toward erasing a fuel system monitor (rich/lean) DTC.
functionality	OBDII systems test PCM outputs for functionality as well as circuit continuity; when the PCM supplies a voltage to an output component, it can verify that the command was carried out by monitoring specific input signals for expected changes.
global disable	Monitors can be globally disabled if certain conditions occur; if there is more than one condition, the scan tool displays only the highest-ranked one; not every condition affects every monitor; for example, global disable can display High Fuel and the monitor status can indicate Waiting; the high fuel condition is not calibrated to prevent that monitor from running, so the monitor can run and complete its test.
global good trip	When all monitors that run once-per-trip have run and have passed; the definition varies by vehicle and model year; typically, the oxygen sensor and catalyst efficiency monitors must run in order to increment a global good trip.
good trip	An indication that the vehicle was operated under a specific set of operating conditions and no fault was detected; there are different types of good trips depending upon what the PCM is trying to verify.
intrusive	An active monitor test that actively changes operating conditions to run its test; also see non-intrusive.
leak detection pump	A leak detection pump pressurizes the EVAP system to detect leaks; used on JTEC and SBEC vehicles.
long-term adaptive	See long-term fuel trim.
long-term fuel trim	After the vehicle has reached full operating temperature, the fuel injector pulse-width correction factors generated by short-term adaptive memory factor is stored in long-term adaptive or long-term fuel trim memory cells; when stored, it is used under all operating conditions; also see short-term fuel trim.

misfire	Lack of combustion in a cylinder during the power stroke.
misfire good trip	Counted when 1000 engine revolutions occur with no misfire.
monitor	Software in the PCM that checks and verifies the performance of various emission-related systems and components.
natural vacuum leak detection	Older vehicles use the natural vacuum leak detection (NVLD) method to dependably detect 0.5 mm; (0.020 in.) leaks in the EVAP system; NVLD replaces the leak detection pump previously used on SBEC and JTEC vehicles; NVLD seals the EVAP system and monitors for a slight pressure drop as the system cools.
non-intrusive	A passive monitor test that does not actively change any operating condition to run its test; also see intrusive.
onboard refueling vapor recovery	ORVR systems greatly reduce HC emissions during refueling by capturing vapors in the EVAP canister; previous EVAP systems vented fuel vapor (HC) emissions during refueling.
one-trip monitor	An emissions system test that sets a DTC and illuminates the MIL the first time a failure is detected; also see two-trip monitor.
oxygen sensor	A sensor that provides a signal to the PCM for oxygen content in the exhaust stream and make the closed-loop feedback engine management system possible; the PCM infers air/fuel ratio from the sensor signal for oxygen content and adjusts the quantity of fuel injected to keep the air/fuel ratio stoichiometic (14.7:1).
open-loop	When the PCM ignores oxygen sensor feedback and only uses pre-programmed values to perform air/fuel ratio adjustments; also see closed-loop.
pending	A monitor may not be run if the MIL is illuminated and a fault is stored; the monitor will not run until the problem is no longer present.
priority	CARB-mandated DTCs are entered and ranked according to priority; in earlier vehicles with limited memory storage, DTCs with higher priority overwrote lower priority DTCs; later vehicles can store as many as eight DTCs before overwriting.
pre-ignition	The ignition of the air/fuel mixture prior to the spark plug firing; pre-ignition is usually caused by some other ignition source such as an overheated spark plug tip or carbon deposits in the combustion chamber.
purge	The process of taking stored hydrocarbon vapors from the charcoal canister and adding them to the intake mixture.
purge vapor ratio	The proportion or concentration of fuel hydrocarbon(HC) vapors in the EVAP system purge flow; if purge flow contains a high ratio of HC vapors, less fuel from the injectors is required.
rationality	OBDII systems compare input signals against other inputs and stored information to see they make sense under the current conditions
short-term adaptive	See short-term fuel trim.

short-term fuel trim	An immediate correction to fuel injector pulse-width; an immediate response to an oxygen sensor signal that is not switching or is consistently high or low; short-term fuel trim (also called short-term adaptive) begins functioning shortly after the vehicle has started, as soon as the oxygen sensor is heated to operating temperature; short-term adaptive values change very quickly and are not stored when the ignition is OFF; also see long-term fuel trim.
similar conditions window	Displayed on the scan tool, allows the user to operate the vehicle under operating conditions similar to when the fault occurred.
speed density fuel control	A fuel control systems that changes fuel injection quantity largely based on changes in engine speed and load; most FCA US LLC vehicles use the speed density system.
stoichiometry	The ideal air/fuel ratio for gasoline, it is 14.7 parts air to 1 part fuel; other fuels have different ratios.
suspend	The task manager may not allow a two-trip fault to mature if conditions might lead to erroneous results; this reduces the chances of the MIL illuminating for the wrong fault.
task manager	Software in the PCM that determines whether enabling conditions have been met to run appropriate tests, monitors parameters during tests, and records test results.
trip counter	Criteria used by the PCM to turn off the MIL; a trip is defined as starting the vehicle and operating it to meet the criteria necessary to run a given diagnostic test; CARB requires three good trips to extinguish the MIL.
two-trip monitor	Some diagnostic tests must fail more than one time before the PCM sets a DTC and illuminates the MIL; these tests are two-trip monitors; also see one-trip monitor.
warm-up cycle	A warm-up cycle occurs when engine coolant temperature starts below and rises above 71°C (160°F), and increases at least 22.2°C (40°F), while no other faults occur; counted by the PCM and used to erase DTCs and Freeze Frames.

Notes:

Notes:

FIAT CHRYSLER AUTOMOBILES

WORLDWIDE

The special service tools referred to herein are required for certain service operations. These special service tools or their equivalent, if not obtainable through a local source, are available through the following outlet:

Mopar Essential Tools and Service Equipment

Snap-on Business Solutions

Telephone 1-855-298-2687 2801-80th Street Kenosha, WI 53143, U.S.A. FAX 1-855-303-8985

MOPAR®

ESSENTIAL TOOLS AND SERVICE EQUIPMENT

www.moparessentialtools.com

MOPAR. Service & Parts STICK WITH THE SPECIALISTS®

RAM DODGE CHRYSLER Jeep SRT

WE ENCOURAGE PROFESSIONALISM

THROUGH TECHNICIAN CERTIFICATION

TRAINING PROGRAM DEVELOPMENT DEPARTMENT

FIAT CHRYSLER AUTOMOBILES

No part of this publication may be reproduced, stored in a retrieval system or transmitted, in any form or by any means, electronic, mechanical, photocopying, recording, or otherwise, without the prior written permission of FCA US LLC.

Copyright© **2016** FCA US LLC

81-699-13019 **Rev. 08/01/16** **LITHO IN U.S.A.**