INSTALLATION GUIDE

AMP RESEARCH Power Step

MADE IN USA

APPLICATION		MODEL YR	PART #	
Dodge Ram Regular Cab *	1500	2009 - 2013	75138-01A	REV B
Dodge Ram Quad Cab *	1500	2009 - 2013	75138-01A	REV B
Dodge Ram Crew Cab	1500	2009 - 2013	75138-01A	REV B
Dodge Ram Regular Cab *	2500/3500	2010 - 2013	75138-01A	REV B
Dodge Ram Crew Cab	2500/3500	2010 - 2013	75138-01A	REV B
Dodge Ram Mega Cab	2500/3500	2010 - 2013	75138-01A	REV B

NOTE: Wiring on the 2013 1500 has changed. See Page 10 for details.

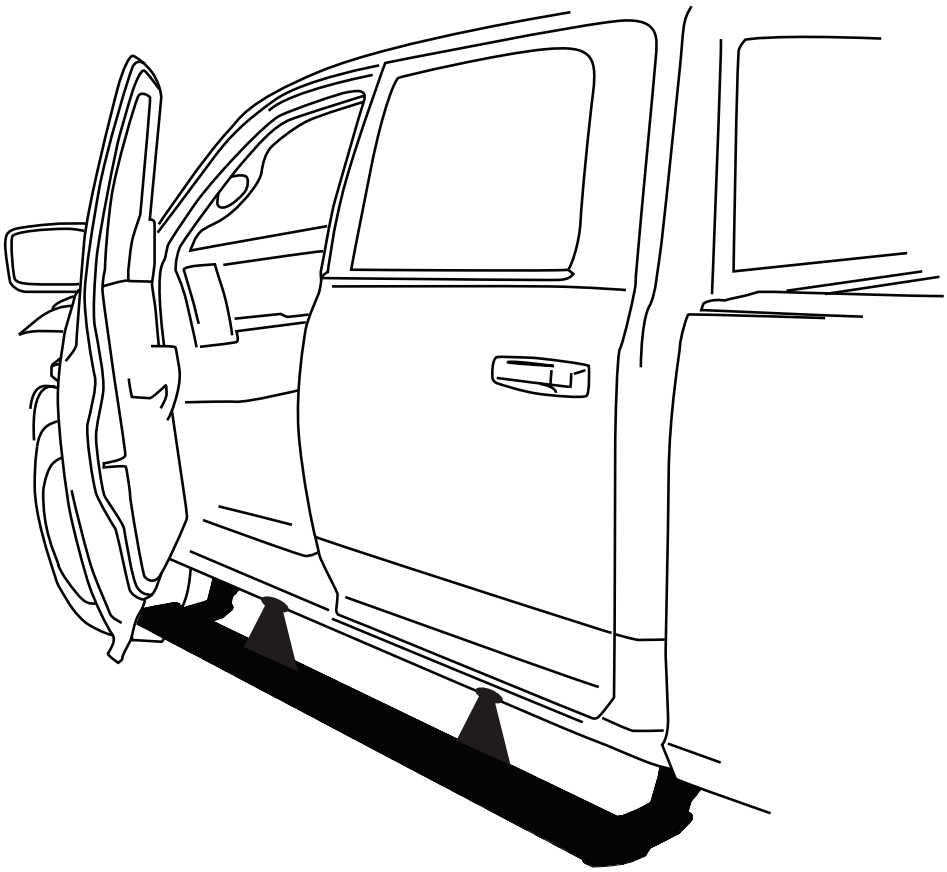

INSTALLATION TIME

3-5 Hours

Professional installation recommended

SKILL LEVEL

1 2 3 4

4= Experienced

TOOLS REQUIRED

- ❑ Safety goggles
- ❑ Measuring tape
- ❑ 13mm wrench
- ❑ 19mm wrench
- ❑ 13mm socket
- ❑ 10mm socket
- ❑ Ratchet wrench and extension
- ❑ Wire stripper / cutter
- ❑ 3/16” hex key (allen wrench)
- ❑ 4mm hex key (allen wrench)
- ❑ Rivet Tool
- ❑ 1/8”, 9/32” and 3/16” Drill Bit
- ❑ T27 torx Bit
- ❑ Center Punch
- ❑ Anti Corrosion Paint
- ❑ Electrical tape

INSTALLATION GUIDE
Motor to linkage assembly

NOTE: The motors will be attached on step 24 (page 9).

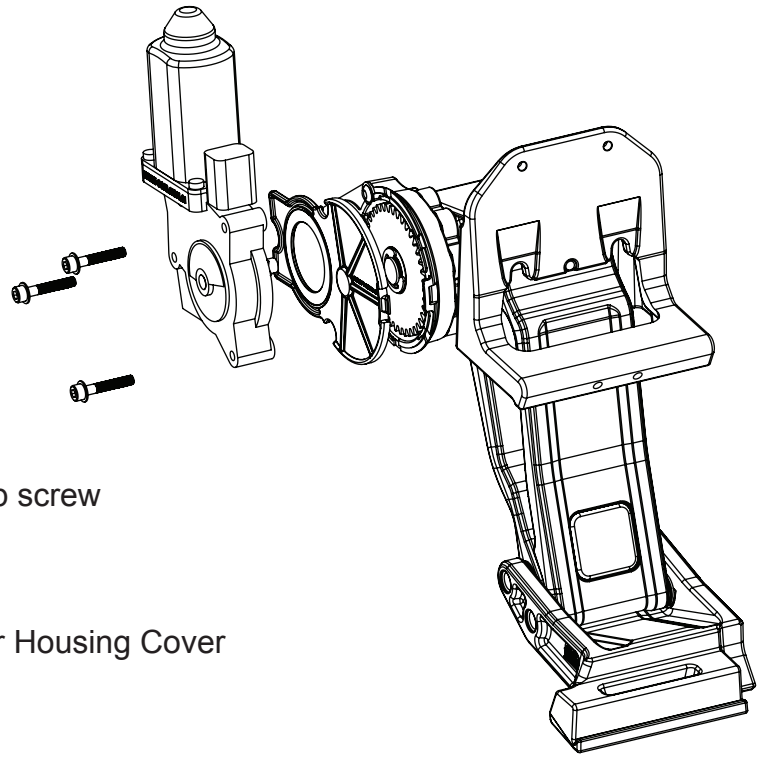

EXPLODED VIEW

80-03129-90	Motor
19-03179-90	Socket cap screw
19-03133-90	Washer
19-03138-90	Drive Gear Housing Cover

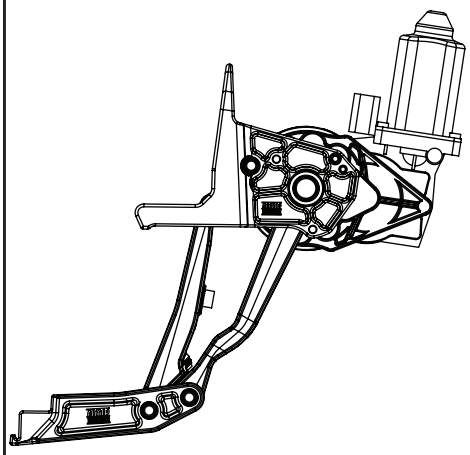

CAUTION: HANDLE WITH CARE.

To ensure our customers receive all components with full integrity, we pack the motors separate from their linkage assemblies. This requires that the installer position and fasten the motor before continuing with the install. Please follow the instructions below and handle the assembly carefully.

CAUTION: Dropping the assembly or any excessive impact MAY cause damage to the motor.

Instructions:

1. Position the gear cover in place as shown if not already in place.

2. Seat motor into position on the three mounting bosses. This may require an adjustment of the gear by moving the swing arms.

3. After seating into place, fasten the motor with the three motor mount screws with 4mm Hex Head. Tighten screws to 36 in-lbs (4N-m). **Do not over torque.**

Note: Some Applications require modification.

Application	Cut Length
Crew Cab, Mega Cab	79” (No Modification Required)
Quad Cab	72” (Trim 7”)
Regular Cab	50” (Trim 29”)

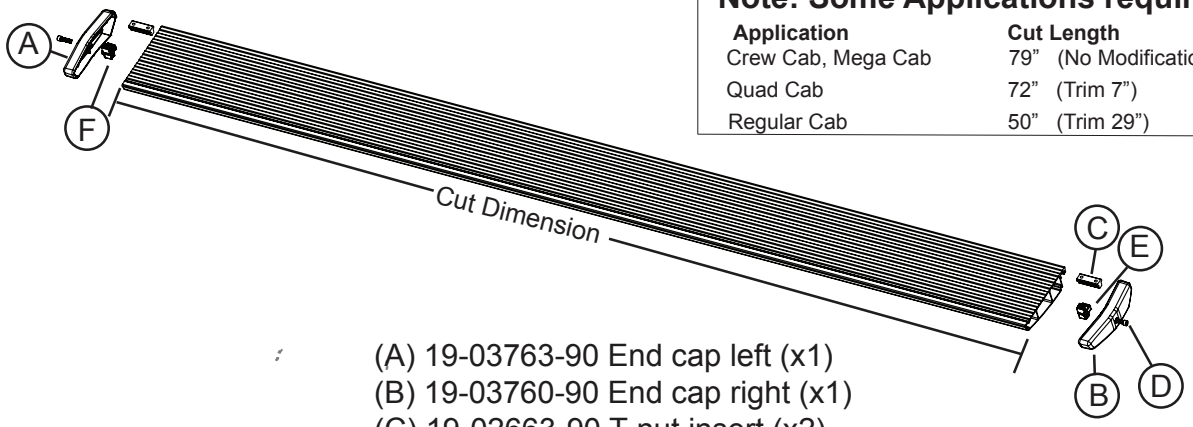

(A) 19-03763-90 End cap left (x1)
(B) 19-03760-90 End cap right (x1)
(C) 19-02663-90 T-nut insert (x2)
(D) 19-02802-90 Socket cap screw (x2)
(E) 19-03761-90 End cap wedge right (x1)
(F) 19-03764-90 End cap wedge left (x1)

1 x2
Running board assembly

Driver Side Linkages

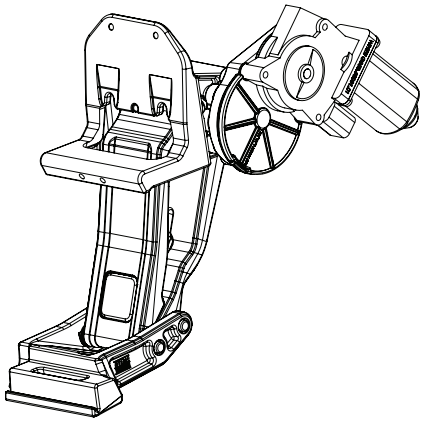

2a
10-03845-12
Motor Linkage Assembly - Driver Side

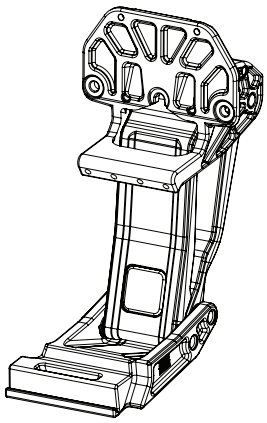

3a
10-03844-12
Idler Linkage Assembly - Driver Side

Passenger Side Linkages

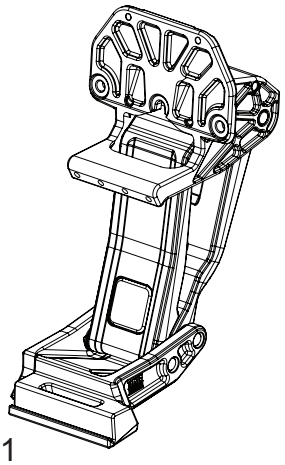

3b
10-03844-11
Idler Linkage Assembly - Passenger Side

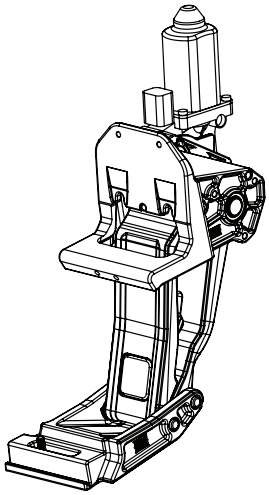

2b
10-03845-11
Motor Linkage Assembly - Passenger Side

PARTS LIST AND HARDWARE IDENTIFICATION

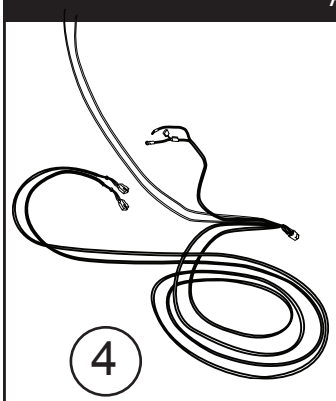

4
19-03695-90L
Wire Harness

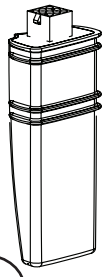

5
19-03297-A06
Type-A
Controller

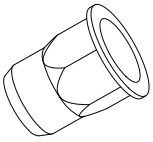

6 x8
19-03829-90
Rivet Nut

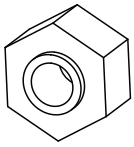

7
19-03205-90
Rivet Nut Tool

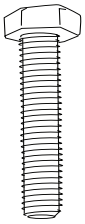

8 x9
19-03326-90
M8 Hex bolt

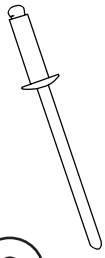

9 x8
19-03895-90
Blind Rivet

10 x9
16-03014-90
Washer (SS)

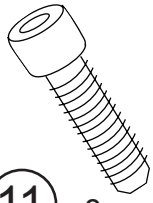

11 x8
19-02802-90
Socket Cap
Screw

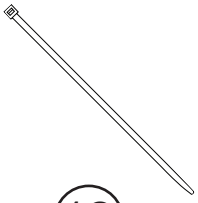

12 x20
19-02805-90
Cable Tie (7”)

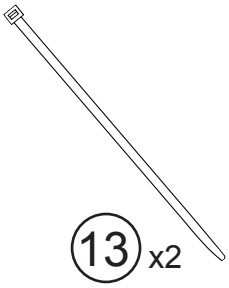

13 x2
19-03339-90
Cable Tie (11”)

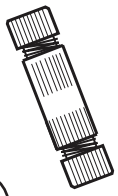

14 x4
19-03354-90
Posi-Tap™
Connector

15 x8
19-03896-90
Button Head Torx
Screw

16 x8
19-03897-90
Washer

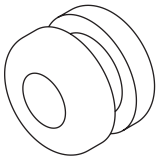

17 x4
19-02640-90
Grommet

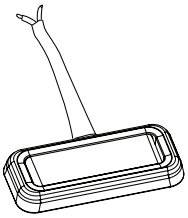

18 x4
19-03302-90
LED Lamp

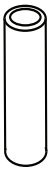

19 x8
19-02989-90
Butt Connector

20 x4
16-03789-90
Reinforcement Bracket

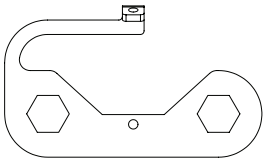

21 x4
19-02784-90
Blind Rivet

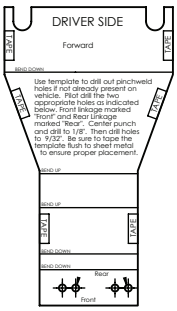

22 x2
19-3885D-90 Driver
19-3885P-90 Passenger
Drill Template

FOR REGULAR AND QUAD CAB ONLY.

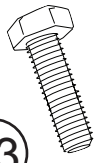

23
19-02849-90
Short Hex Bolt

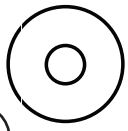

24
19-02389-90
Large Washer

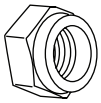

25
10-00115-60
Nylock Nut

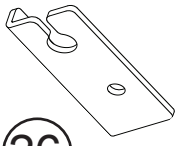

26
16-03701-90
Bracket

NOTE: 1500 RAM Powerstep installations require additional steps and come with the required additional hardware. Please read and carefully follow the instructions in Step 1 for your vehicle model.

ALL1500 MODELS

Follow Steps 2-5 to relocate brake cable and then proceed with the Power Step installation.

1a

ALL 2500/3500 MODELS

Skip to Step 6 and proceed with the Power Step installation. Relocation of the brake cable is not neccessary on Crew Cabs.

1b

While holding brake cable adjustment nut with wrench (located on driverside along frame, towards the rear), loosen brake cable to allow for slack. Mark position of nut before loosening.

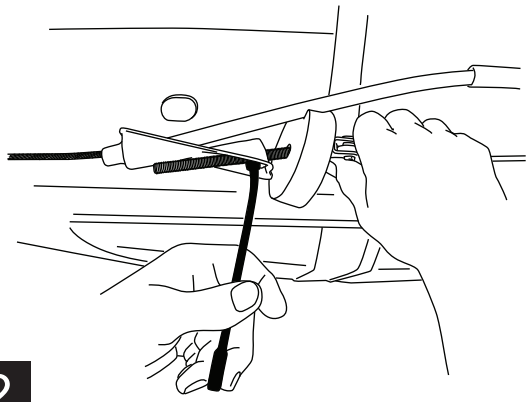

13mm

2

After gaining enough slack, detach brake cable as shown below. This detachment point is located just to the rear of the adjustment nut.

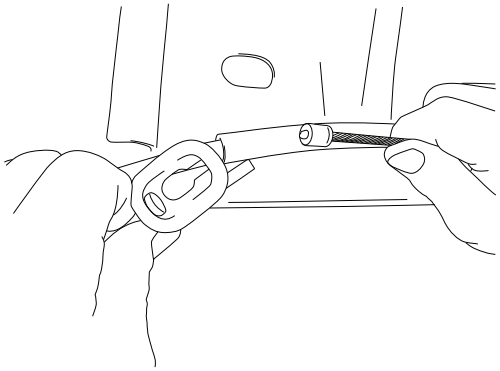

3

Remove brake cable guide from frame by depressing locking tabs and sliding guide out through hole. Unthread brake cable from frame mount.

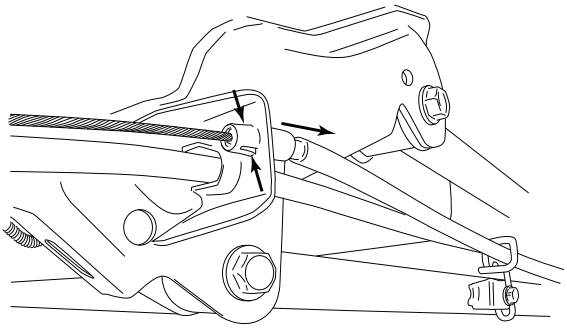

4

Attach brake cable guide to supplied Brake Cable Bracket (23) and mount bracket with supplied hardware. Reattach brake cable and readjust brake cable adjustment nut to original position.

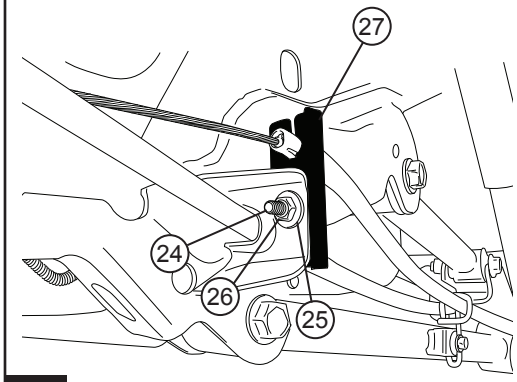

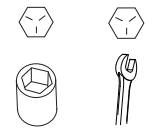

13mm 13mm

5

HARDWARE MOUNTING OVERVIEW (passenger side shown)

Locate forward most and rearward most mounting provisions on inner sill of truck. Remove tape from sill drain hole at both mounting points.

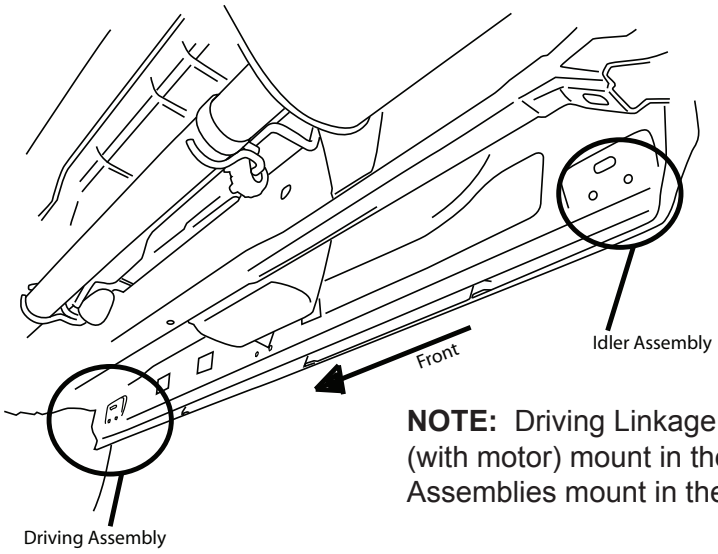

NOTE: Driving Linkage Assemblies (with motor) mount in the front; Idler Assemblies mount in the rear.

6

Set Reinforcement Plate in place and locate with rivet nuts. Drill hole using an 1/8” drill bit. After drilling apply paint to prevent rusting

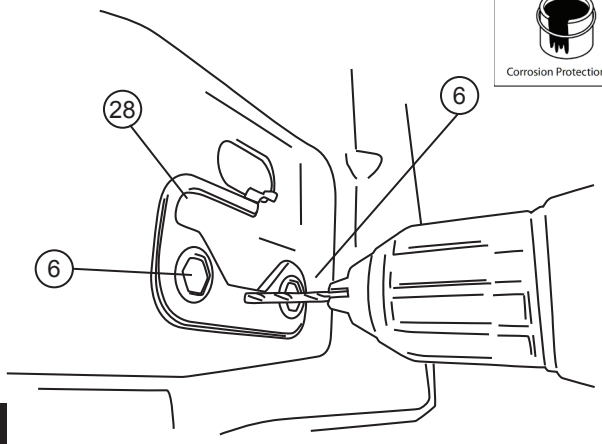

7

Once hole is drilled insert a piece of string or wire through hole in Reinforcement Plate. Set plate into position.

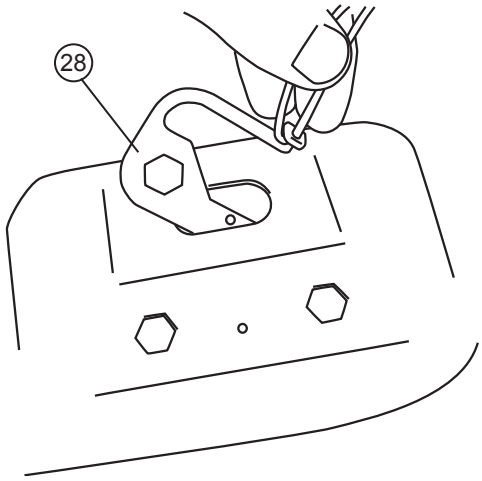

8

Set rivet nuts into place for alignment. Insert pop rivet through hole in plate and secure in place. Once pop rivet is installed remove string or wire from Reinforcement Plate. **NOTE: Verify plate is pulled flush to the body before securing pop rivet.**

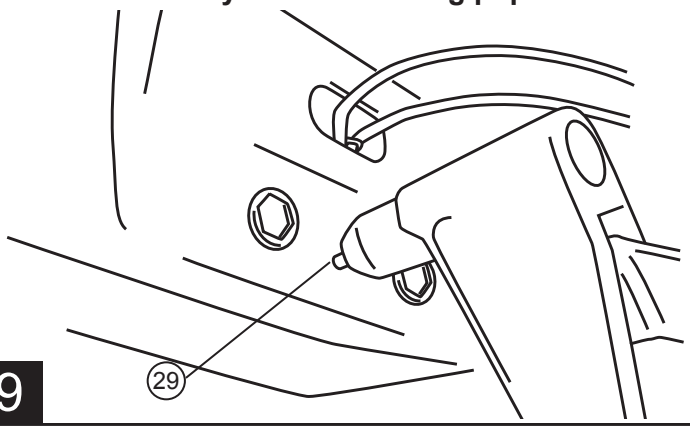

9

Assemble Hex Bolt (lubricated with soapy water), Washer, Rivet Tool, and Rivet Nut together as shown and place into hex cutouts in sill. An extra Hex Bolt and M8 Washer is supplied to install rivet nuts.

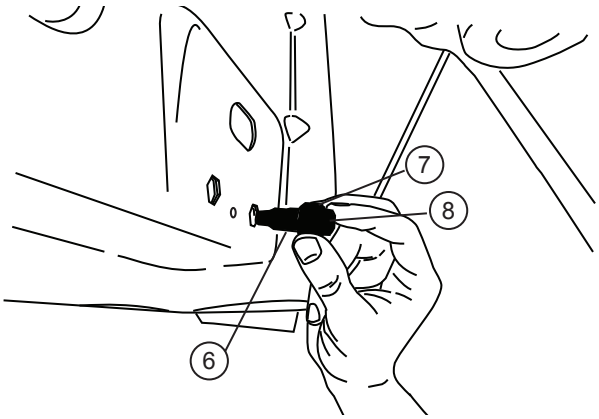

10

With Rivet Nut Tool held in place with 19mm wrench, tighten Hex Bolt until Rivet Nut deforms and secures itself to the sheet metal (110 in-Lbs. or 4 turns). Remove Hex Bolt and Rivet Nut Tool. Repeat for each of the four mentioned mounting locations.

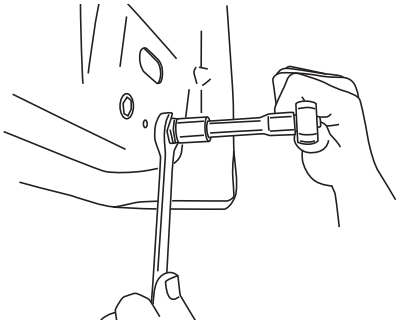

WARNING: Rivet Nuts not properly collapsed will not hold securely to sheet metal.

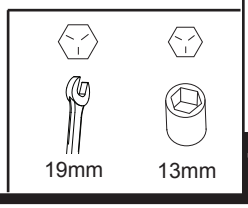

11

NOTE: Hold Rivet tool with wrench while loosening bolt.

Once rivet nuts are in place use a screwdriver to push back tab in hole to avoid interference with linkage mount.

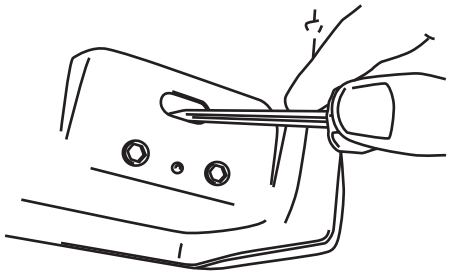

12

NOTE: Models with holes on the pinch weld skip to Step 17. (some 2013 Models)

Fold both the passenger and driver side templates in the proper direction noted on the template. Thread in hex bolts and slide slots in template up to bolts. Next use tape and apply tape on all surfaces on template that is labeled “Tape”. Start at Hex bolts and make sure template is flat on each surface. Work your way down and out.

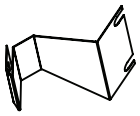

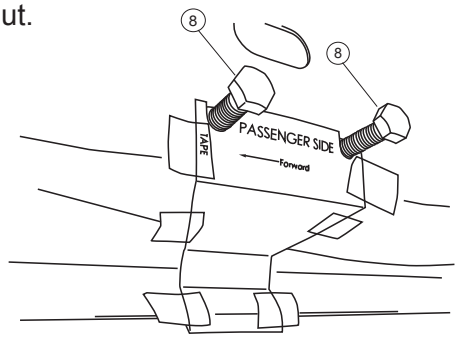

13

Mark appropriate holes as indicated with a center punch. Front linkage marked “Front” and Rear linkage marked “Rear”.

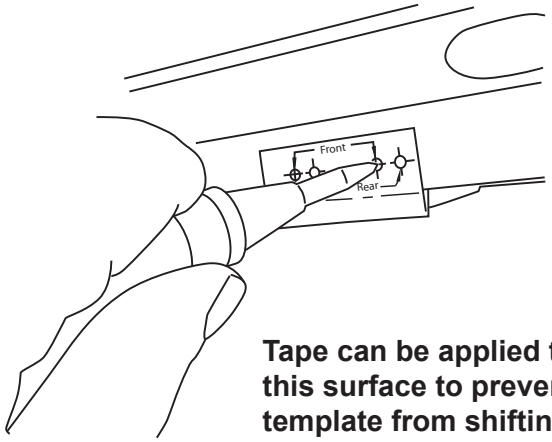

Tape can be applied to this surface to prevent the template from shifting.

14

Using a marker draw cross hatch to verify bit does not walk while drilling.

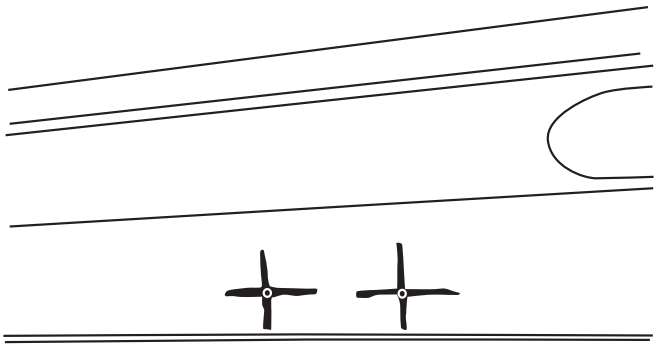

15

Pre drill hole using an 1/8” drill bit. Next drill holes to 9/32”. Debur all surfaces. NOTE: Filing of hole may be required if drill bit wandered. After drilling apply paint to prevent rusting.

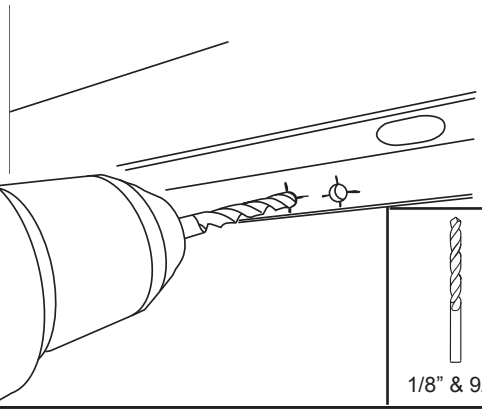

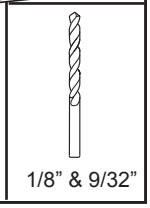

16

Linkage Installation: On rear linkages thread front hex bolt into rivet nut with washer. Note on Front drive linkages both hex bolts can be threaded into position.

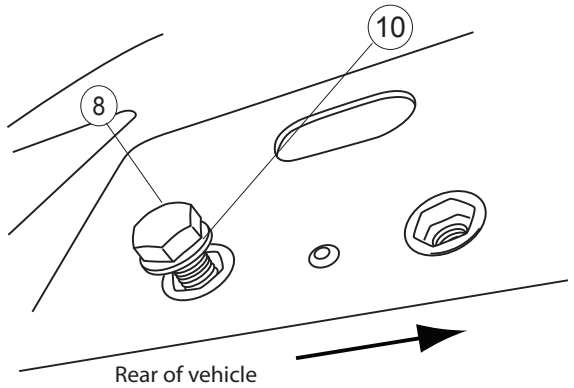

17 Passenger Side Rear mount position shown.

With linkage in position insert Hex bolts into rivet nut locations. Snug bolts but do not tighten. **Note: Pre threaded bolt will attach to slot centered on linkage. Idler linkages will use 2 of the 3 mount points.**

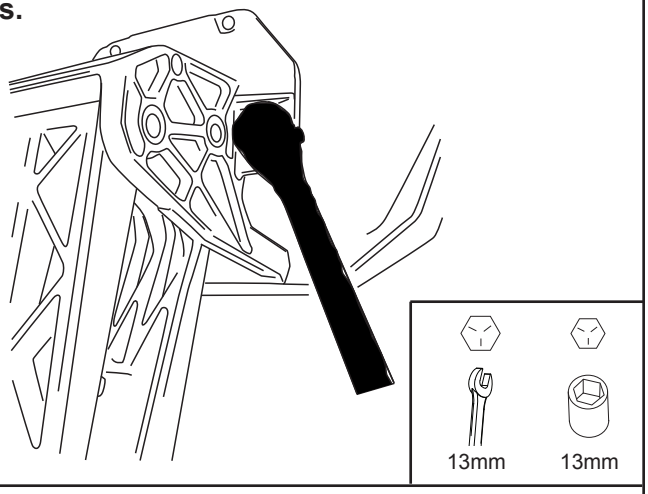

18

Using a T27 Torx driver start torx bolts and washers. Snug bolts but do not tighten. **Note on 2013 models with pre stamped holes filing may be required if holes do not line up.**

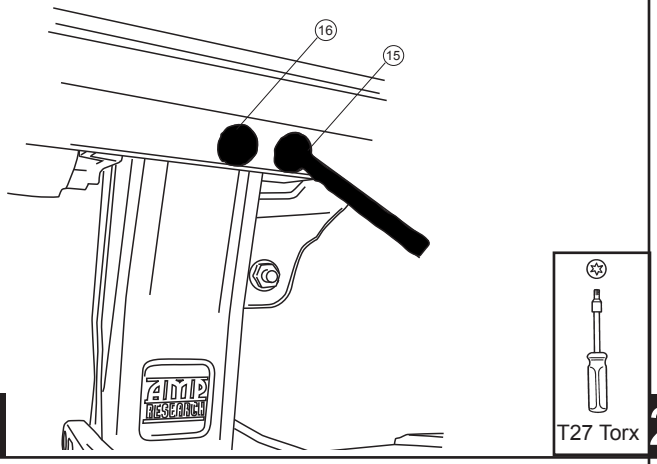

19

With linkage resting square on the hex bolts Using a 3/16” Drill bit, drill both upper holes in linkage through sheetmetal. After drilling apply paint to holes to prevent rusting.

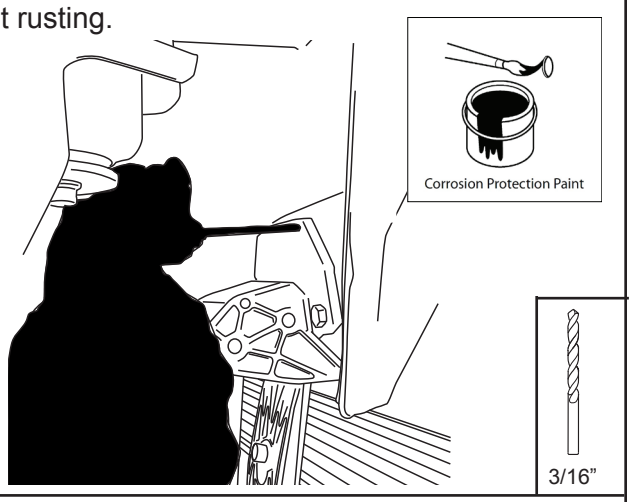

20

Using a Rivet Gun install rivets.

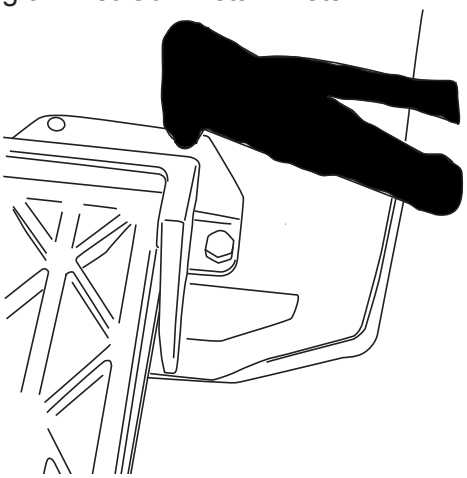

21

Using a 13mm wrench tighten two hex bolts on linkage. Torque to 16 ft-lbs.

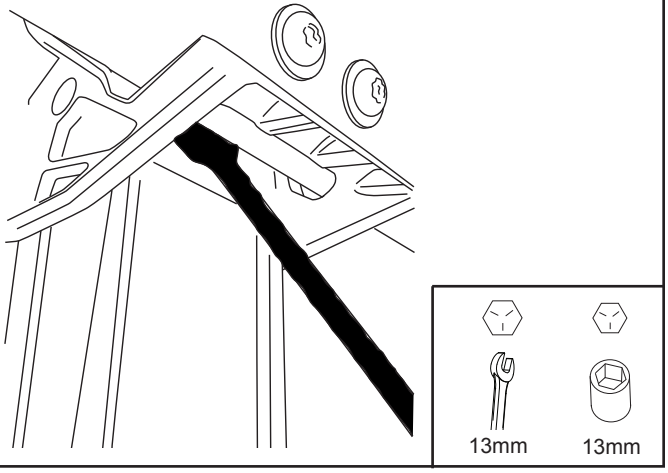

22

Using a T27 Torx driver torque bolts to 6 ft-lbs.

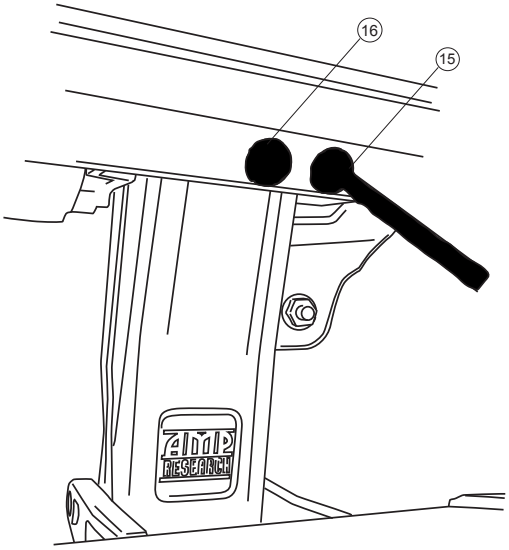

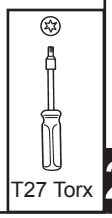

23

Using a 4mm hex key torque bolts to 36 in-lbs. **See page 2 for motor installation instructions.**

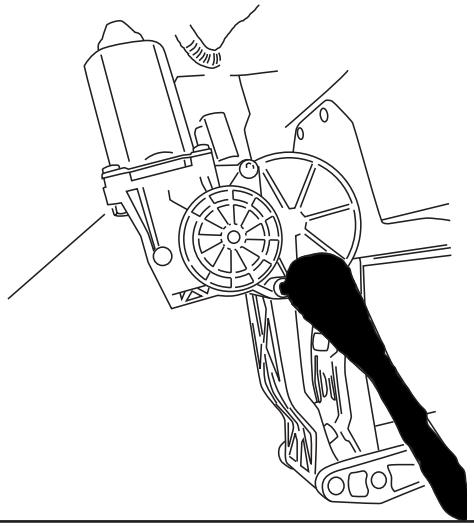

24

The jogs in the lower part of the linkages point toward one another, as shown, Drive (motor) Linkage in the Front and Idler Linkage in the Rear. Note: Linkage position described in parts list on page 3.

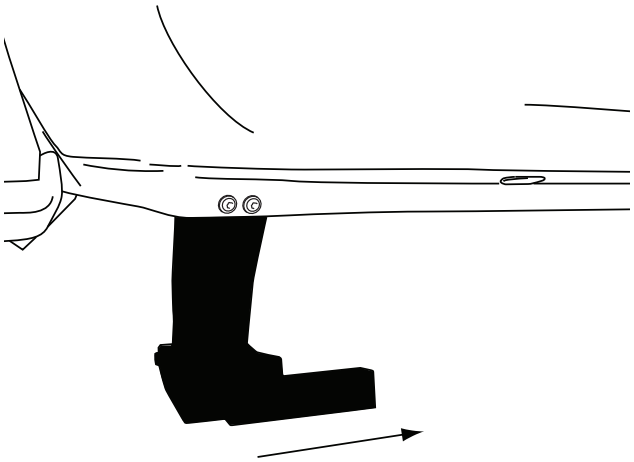

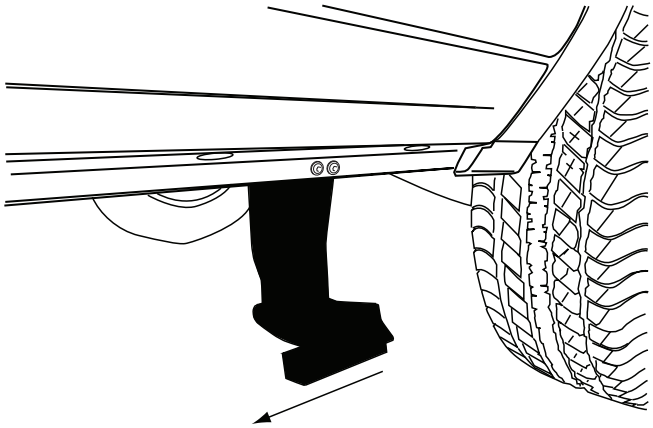

25

Prepare large tie-wraps for mounting Power Step Controller. Loosely loop tie-wraps around large bundle of wires behind battery in engine compartment.

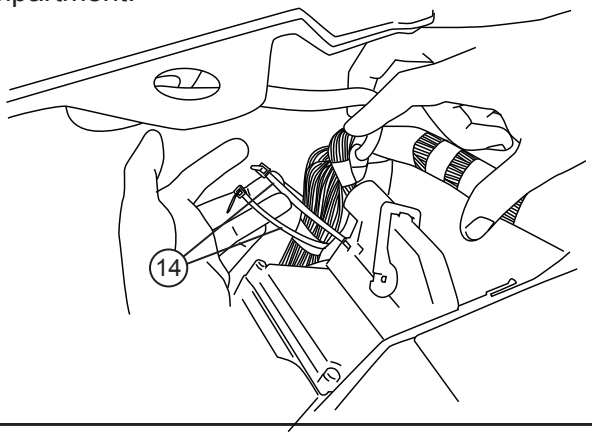

26

Insert controller into tie-wrap loops and cinch down securely. The tie-wraps should cinch down into channels on controller surface.

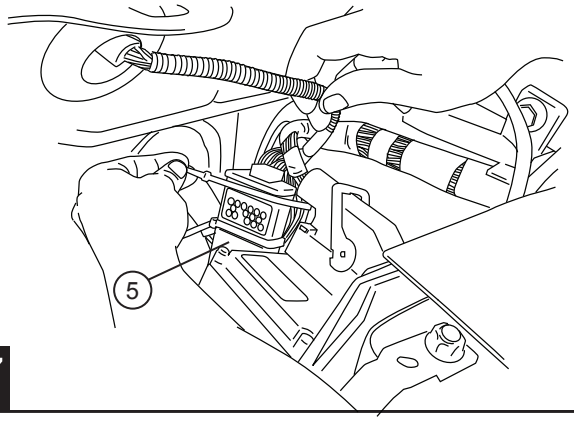

27

Remove fuse from Power Step Wire Harness.

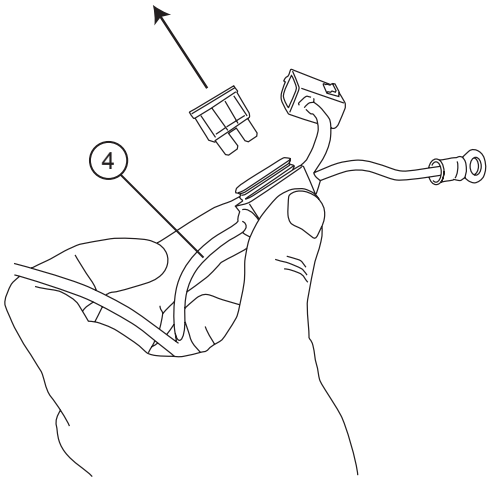

28

Connect power leads from Controller, Red to positive battery terminal and Black to the vehicle body ground as shown.

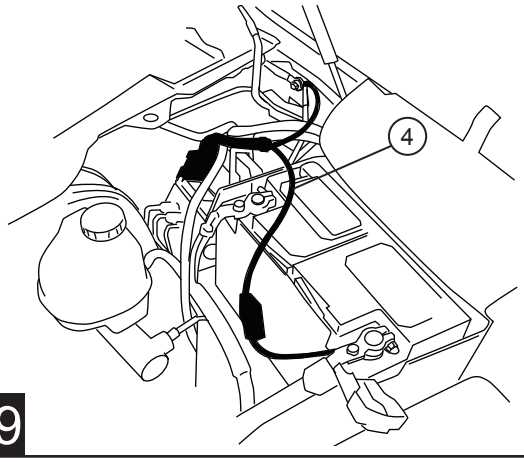

10mm

29

Wiring to Door Ajar Wires: Important notes...

Wiring on 2013 RAM 1500 vehicles will follow steps 31-35. Wiring on 2009-2012 RAM 1500 and 2010-2013 RAM 2500/3500 vehicles will follow steps 36-41.

Factory Door Ajar Wire General Location		
Vehicle	2013 RAM 1500	2009-2012 RAM 1500 2010-2013 RAM 2500/3500
Location	Under dash on driver side, on white connector panel, located on three lower connectors.	Driver side front corner of engine compartment, on underside of fuse panel, located on a single connector.

30

Steps 31-35 are for 2013 RAM 1500 models only. Proceed to STEP 36 for all other models.

Locate large rubber wire boot on driver side firewall as shown below. Slice small opening as shown below to run trigger wires through.

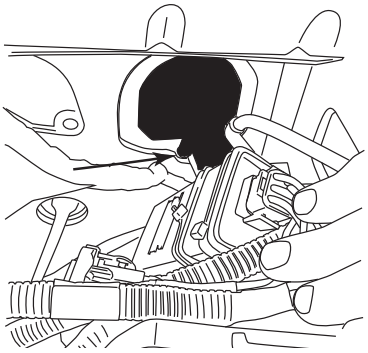

31

Tape leading end of wires together and push through rubber boot to cabin side of the firewall. Silicon lubricant may be used for ease of passage. The trigger wires will come out just above and to the left of the brake pedal.

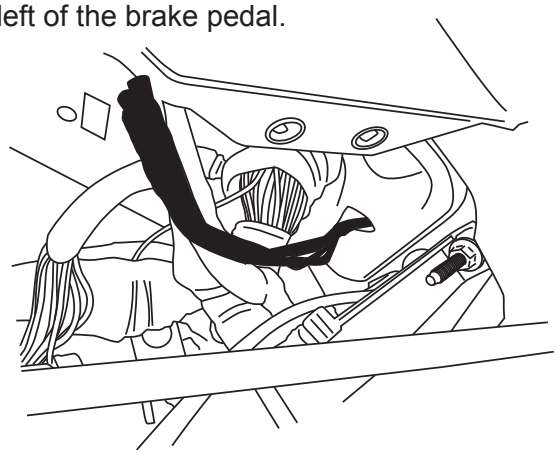

32

To gain access to white connector panel against driverside firewall panel (inside cab of vehicle), just behind e-brake pedal, some vehicles will have a mounted component that will need to be removed. The component's bracket can be removed by the three fasteners indicated below.

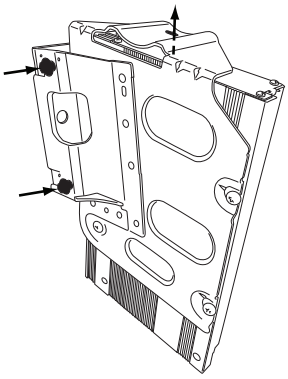

33

Locate white connector panel against driverside firewall panel, just behind e-brake pedal. Locate three connectors as shown below and connect Powerstep trigger wires as indicated in the chart.

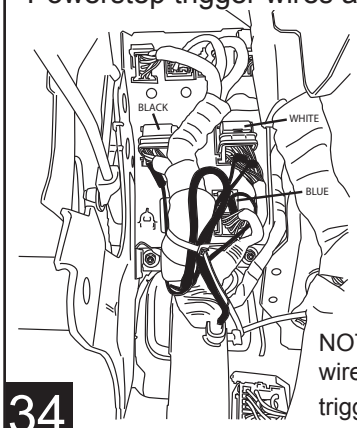

Door Ajar Wire	Wire Color/ Stripe Color	Connector Color
Driver Front	Violet	White
Pass. Front	Violet/White	White
Driver Rear	Violet/Gray	Blue
Pass. Rear	Violet/ Yellow	Black

NOTE: There may be two Violet/Gray wires, but only one will allow steps to trigger with front pass. door.

34

Splice Power Step trigger wires into the Door Ajar wires with provided Posi-Tap™ splicers. The Power Step trigger wires color coordinate with the factory Door Ajar wires. Follow the steps below to correctly splice wires.

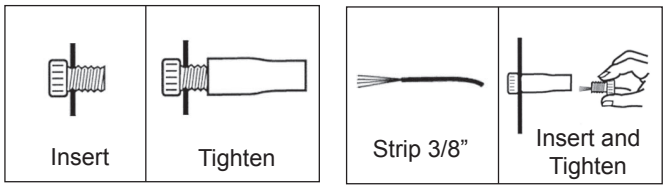

2013 RAM 1500 proceed to STEP 42 after completing this step.

35

Steps 36-41 are for 2009-2012 RAM 1500 and 2010-2013 RAM 2500/3500.

Route the trigger wires of Power Step Harness (Purple wires) down toward the fuse box located in front of the battery.

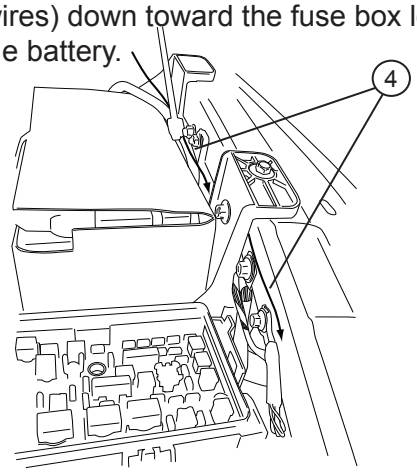

36

Remove fuse box lid and fuse box power lead with 13mm wrench. While depressing release tabs, lift fuse box to view bottom side.

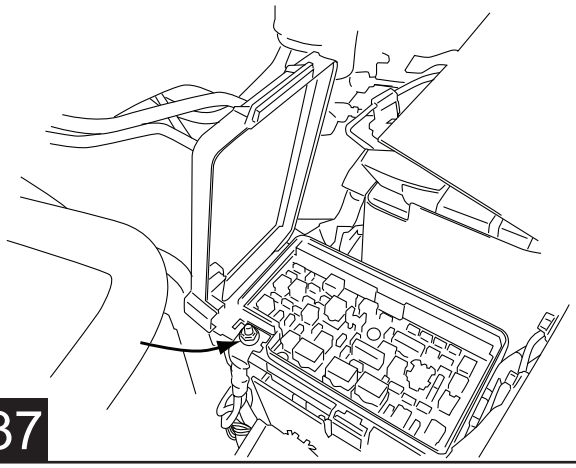

13mm

37

Locate and remove Black Connector with Gray latch on bottom side of fuse box (labeled “G” where connected to fuse box).

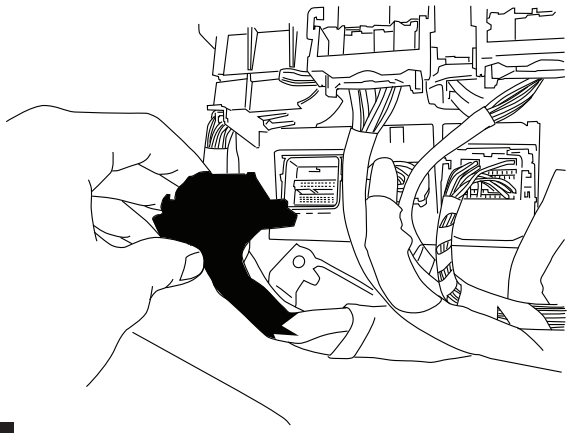

38

Locate the vehicle’s Door Ajar Switch wires on the removed connector as indicated in chart and diagram below according to vehicle model year.

Model Year 2011- 2012

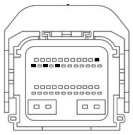

CAVITY	COLOR	FUNCTION
11	VIOLET	DRIVER DOOR AJAR SWITCH SENSE
12	VIOLET / WHITE	PASSENGER DOOR AJAR SWITCH SENSE
16	VIOLET / GRAY	LEFT REAR DOOR AJAR SWITCH SENSE
14	VIOLET / YELLOW	RIGHT REAR DOOR AJAR SWITCH SENSE

Model Year 2009- 2010

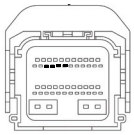

CAVITY	COLOR	FUNCTION
14	VIOLET	DRIVER DOOR AJAR SWITCH SENSE
15	VIOLET / WHITE	PASSENGER DOOR AJAR SWITCH SENSE
16	VIOLET / GRAY	LEFT REAR DOOR AJAR SWITCH SENSE
17	VIOLET / YELLOW	RIGHT REAR DOOR AJAR SWITCH SENSE

39

Splice Power Step trigger wires into the Door Ajar wires with provided Posi-Tap™ splicers. The Power Step trigger wires color coordinate with the factory Door Ajar wires. Follow the steps below to correctly splice wires.

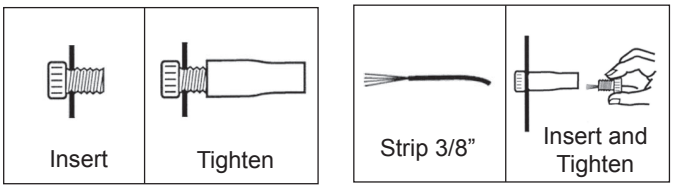

40

With Posi-Taps securely in place, carefully replace connector and drop wire bundles and fuse box back into place. Reattach fuse box power lead that was removed in previous step.

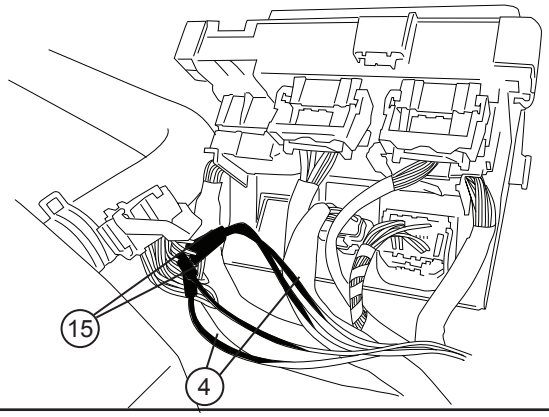

41

Route the two Wire Harness legs down over the wheel wells toward Motor Linkages, long leg across to the passenger side. Secure harness with tie wraps.

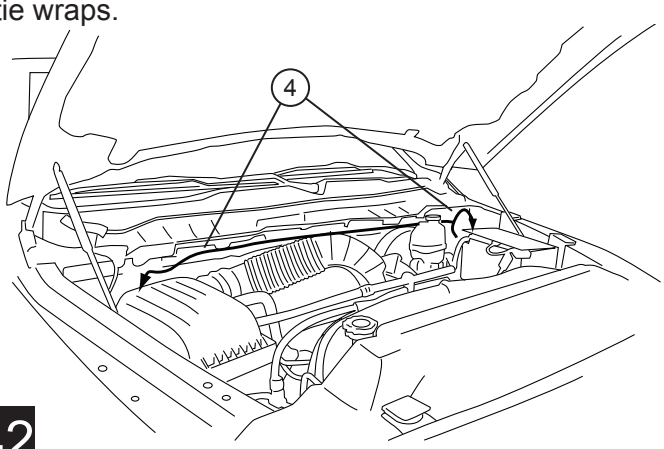

42

On driver side, run Wire Harness leg down and along underside of the vehicle floor and frame to front Drive Linkage. Connect harness to motor and secure harness with tie wraps. Route remainder of wire harness towards rear linkage assembly for LED lights

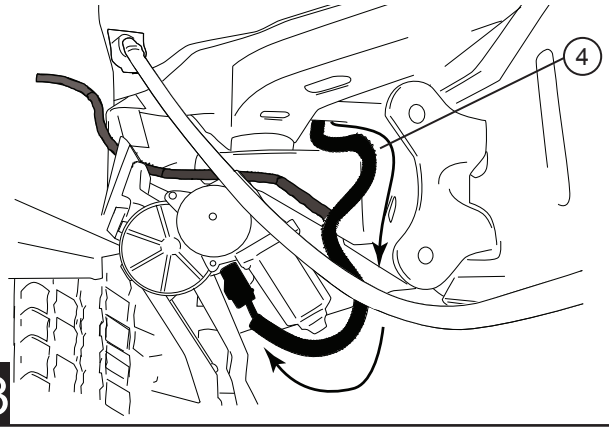

43

On Passenger Side, run Wire Harness leg down and along underside of the vehicle floor and frame to front Drive Linkage. Connect harness to motor and secure harness with tie wraps. Route remainder of wire harness towards rear linkage assembly for LED lights

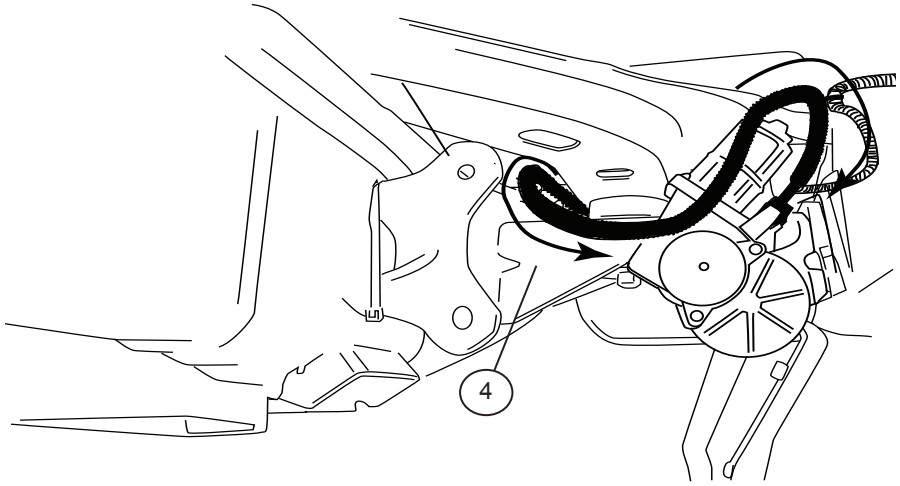

44

On each side of the vehicle measure from the front edge of door line on the pinch weld to the specified lengths below. Measure at 22” for the front LED Light and 64-3/4” for the rear LED Light. **Note for regular cabs mount lights at 10” and 45”.**

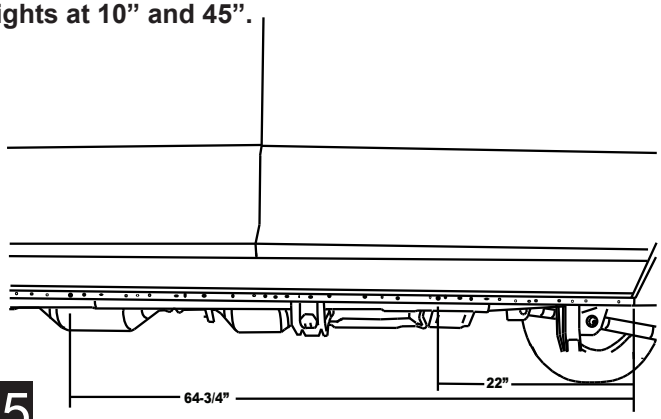

45

Drill a 9/32” hole through the pinch weld at marked locations. Debur all holes. After drilling apply paint to holes to prevent rusting

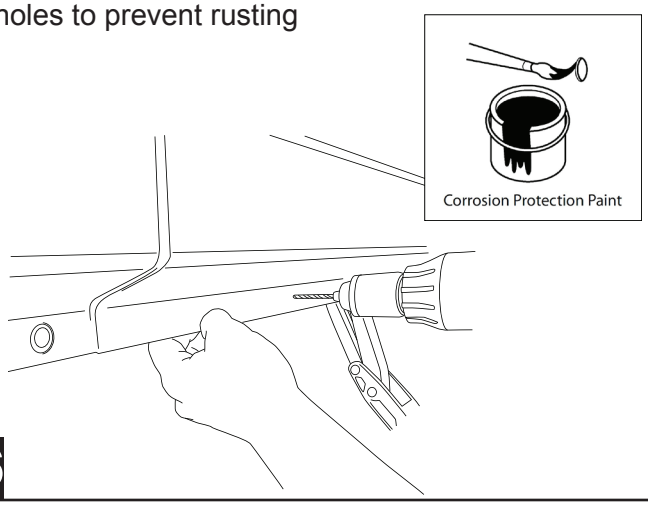

46

Insert grommet into drilled holes. Insert lamp wires through the grommets. (Silicon lube will help wires slip through grommets.)

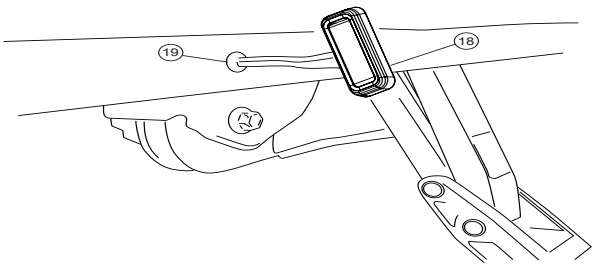

47

Affix lamp to rocker panel surface. Make sure lamp is affixed to a flat, clean surface.

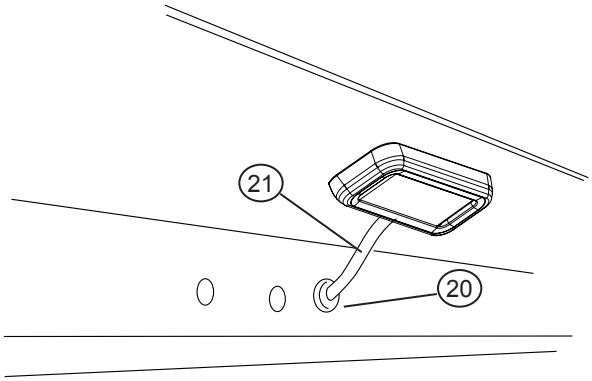

48

Using supplied butt connectors, connect the lamp wires. Red to Red, Black to Black

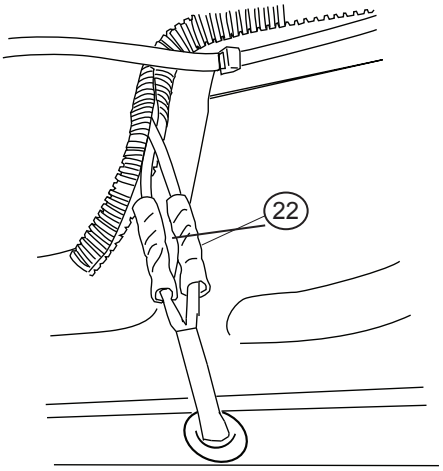

49

Close and wrap with conduit and electrical tape. Secure all loose wires with cable ties, with lamp wires pulled upward to avoid any wire snagging.

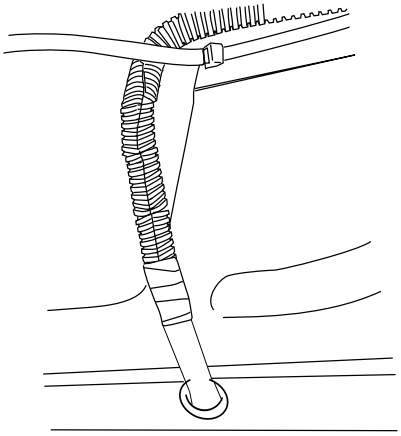

50

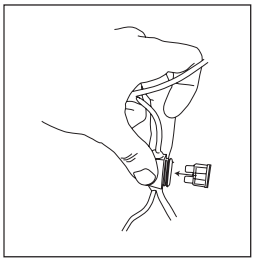

Install boards: Slide mounting T-Nut of board into position and attach to linkages. Shift board forward as much as possible for proper clearance. The end of board/end cap will nest into linkage lower mount 1/2” when positioned correctly. **With boards in extended position step on boards to seat linkages. Verify that board end caps do not contact the pinch weld.**

With both doors open reinstall fuse.

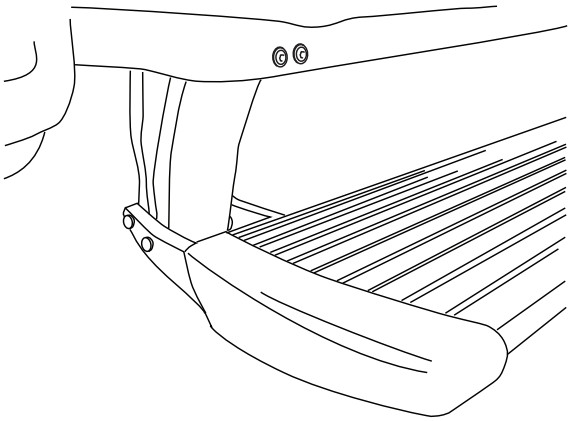

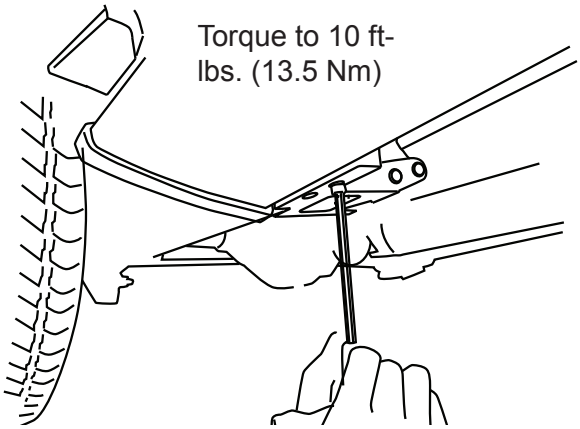

51

Check that all doors activate the Power Step and the LED Lights work when doors open and close. Reinstall any remaining trim panels.

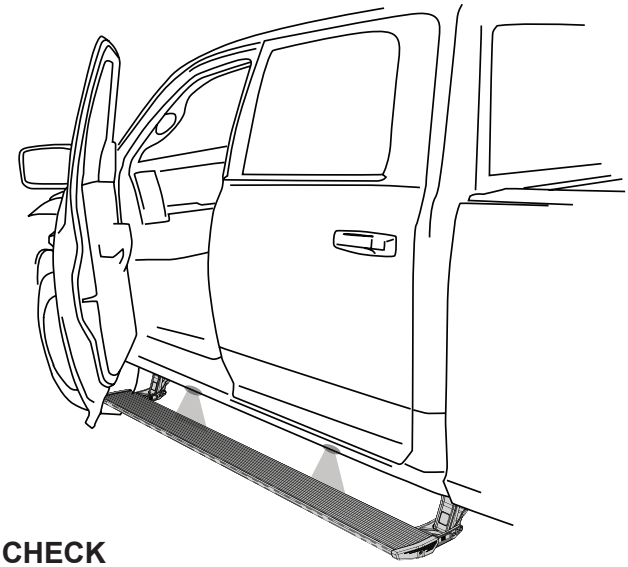

FINAL SYSTEM CHECK

Check that all doors activate the PowerStep and the LED lights work when doors open and close.

NORMAL OPERATION: When the doors open, PowerStep automatically deploys from under the vehicle. When the doors are closed, PowerStep will automatically return to the stowed/retracted position. ***Note that there is a 2-second delay before the PowerStep returns to the stowed/retracted position.***

CORRECT OPERATION OF LIGHTS: All four lamps will illuminate upon opening any door of vehicle. Lamps will stay on until restowing of both Power Steps or until 5 minutes has expired with the doors open. When the lights timeout after 5 minutes, they can be reillumintated by closing and opening any door of vehicle.